Smart Systems
for Solar Power

Technical data sheet
EC Adapter 30-40mm

Updated: 24.06.2021

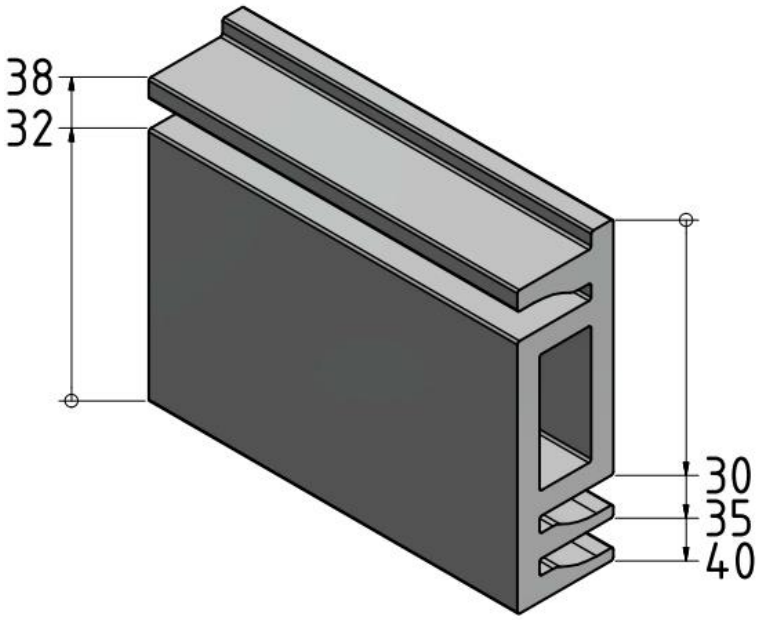

Parameter	Values
Material	aluminium
Surface	natural
Module frame heights in mm	30, 32, 35, 38, 40

Subject to errors and modifications.