Sonnenstrom mit System

IBC SOLAR

Installation instructions

IBC AeroFix / AeroFlat

Version 21.01 Date: 25-Jan-2021

Contents

1. Introduction 3

2. Tool list 4

3. General information, standards and regulations 4

4. System variants 8

5. Technical data 10

6. System planning 11

7. System design/dimensioning 15

8. System installation AeroFix 16

9. System installation AeroFlat 44

10. System security device 56

11. Final inspection 59

12. Parts list 60

13. Appendix 67

14. Notes 73

1. Introduction

Dear customer,

Congratulations, you have chosen an IBC product! Now you can enjoy the quality and reliability of the IBC AeroFix / AeroFlat flat roof system.

To ensure that you can install and start up your IBC AeroFix / AeroFlat flat roof system quickly and simply we have enclosed detailed assembly instructions. They should help you to quickly become familiar with the assembly of the bracket and the modules.

Please read these instructions carefully before installation. If you still have questions after reading them, please contact your IBC partner, who will be happy to assist you.

We wish you a sunny day!

Your team
IBC SOLAR AG

ibc-solar.de/link/mv25

Fig. 1: Playlist all instalation videos

2. Tool list

- Cordless screwdriver with various bits (Torx 40, SW8 socket, SW10 socket, SW15 socket,...)
- Bit holder 300 mm
- Pencil
- Tape measure
- Folding rule
- Plumb line
- Angle grinder with diamond grinding wheel
- Torx screwdriver with T-handle, size TX40
- Torque wrench
- Assembly gloves
- Assembling jig
- Static friction measureing device (in the planning phase)

3. General information, standards and regulations

The IBC AeroFix / AeroFlat flat roof system is for mounting solar modules onto flat roofs and pitched roofs.
The modules are attached on supports or base rails using clamps.
The number of parts varies depending on installation size..



Important information:

- Your IBC AeroFix / AeroFlat flat roof system will be delivered complete with all accessories!
- Before you begin, please check that all parts are included by using the attached packing list and parts list.
- Electrical work must be carried out by a qualified electrician!
- The processing guidelines and in individual cases specific guidelines from the relevant manufacturer for the roofing and modules must be adhered to!

- Condition for the 10-year guarantee to be granted: this only applies with the use of IBC components. The guarantee is not valid for components from other suppliers. Complete guarantee conditions are stated in the guarantee document.

- We advise the use of gloves to avoid injuries.

- During the entire assembly time, it must be ensured that at least one copy of the current installation manual is available on the construction site.

Other important information and dimensioning standards

The entire PV system must be mounted according to the generally recognised technical regulations. Please ensure that you observe the accident prevention regulations of the German employer's liability insurance associations (Berufsgenossenschaften), in particular:

- BGV A1 General instructions

- BGV A3 Electrical systems and equipment

- BGV C22 Construction work

- BGV D36 Ladders and steps

Please ensure that installation is adapted to on-site conditions and corresponds to the respective generally recognised technical regulations. Local regulations must be observed.

Please observe all regulations and guidelines under public law during planning, erection, operation and maintenance of grid-connected PV plants including the following: EN standards, DIN standards, TAB, accident prevention regulations, the guidelines from the association of property insurers (VDS – fire protection guidelines), the professional guidelines of the roofing association and general guidelines (e.g. timber structures, roofing and roof-sealing works).

Please note in particular (this is not an exhaustive list):

- DIN / VDE 0100, particularly part 712 (erection of power installations with nominal voltage up to 1000 V)

- DIN / VDE 0298 (electric cables)

- VDI 6012 (local energy systems in buildings – photovoltaic)

- DIN / VDE 0126 (solar energy systems for domestic use)

- DIN / VDE 0185 part 1 to 4 (lightning protection)

- DIN 18338 Roof covering and roof sealing works

- DIN 18451 Scaffolding work

- DIN 18015 Planning and erection of electrical installations in residential buildings

- TAB (technical closing conditions for connecting to the low-voltage grid of power supply companies)
- VDEW guidelines (guidelines for connection and parallel operation of decentralised power generation in the low-voltage grid)
- Notes on solar from the German Institute of Civil Engineering (DIBt), in the current edition
- DIBt building regulation list, in the current edition
- DIN 4102-1:1998 Fire behaviour of building materials and elements – part 1: Building materials; classification, requirements and tests
- DIN EN 13501-1:2010-01 Fire classification of construction products and building elements – part 1: Classification using the results from fire behaviour tests on construction products
- EN 1991-1-3 (General actions – snow loads)
- EN 1991-1-4 (General actions – wind loads)
- EN 1993-1-1 Design of steel structures: General rules and rules for buildings
- EN 1995-1-1 Design of timber structures
- EN 1999-1-1 Design of aluminium structures
- General certificate of building approval Z-30.3-6: Products, connecting devices and structural components made from stainless steel
- DIN 4426 Equipment for building maintenance - Safety requirements for workplaces and accesses - Design and construction
- DGUV Information 203-080 - Installation and maintenance of PV systems
- DGUV Information 201-056 - Planning principles of anchor devices on roofs
- Model Building Regulation (MBO) / state building regulations
- Note papers from BSW-Solar e.g. Securing the position of PV flat roof systems against displacement due to thermal expansion ("temperature hike")

Solar modules

Framed solar modules may only be used if they fulfill the following criteria:

Module dimensions according to 10 System security device

Module manufacturers approval regarding module clamping

Hold valid IEC 61215 / IEC 61646 and protection class II / IEC 61730

Framed solar modules

Please note that the guarantee for the solar modules will expire if modifications are made to the module frames (e.g. by drilling additional holes). For warranty reasons, the assembly instructions from the respective solar module manufacturer must be strictly adhered to.

Lightning and surge protection

Please note that the lightning and surge protection of the PV system is to meet the current requirements for

- DIN / VDE 0185 part 1 to 4,
- DIN / VDE 0100 part 712 and
- VdS 2010

For more detailed information please refer to the local regulations and the aforementioned standards and guidelines.

In general we recommend that you integrate the assembly system and the module frames into the local potential equalisation and use surge protection devices.

Potential equalisation is always necessary if the solar modules used do not meet requirements for protection class II and/or transformerless inverters are used.

The cross-section of the potential equalisation conductor must correspond to the main DC cables but must be at least 6 mm² (copper).

If the building has a lightning protection system and the PV generator is not in the protection area of the arresting device, then the module frame and assembly system must be integrated into the external lightning protection and surge protection devices must also be installed.

The electroconductive connection must be implemented with at least 16 mm² (copper).

Cable routing

Even when you are installing the frame, certain points regarding cable routing and wiring should be kept in mind.

- To avoid surge voltage couplings from lightning strikes, the resulting conductor loop must be kept as small as possible.
- The cable routing must allow for any future slipping caused by snow and ice.
- Water must not be allowed to collect around the wiring, continuous water drainage must be provided.
- The wires must be installed with maximum possible UV and weather protection.

4. System variants

4.1 AeroFix

ibc-solar.de/link/mv34

Southern orientation



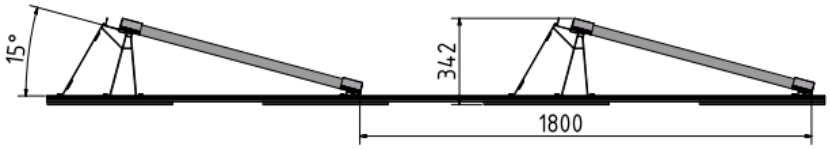

Fig. 2: AeroFix 15-S / AeroFix 15-S Kits

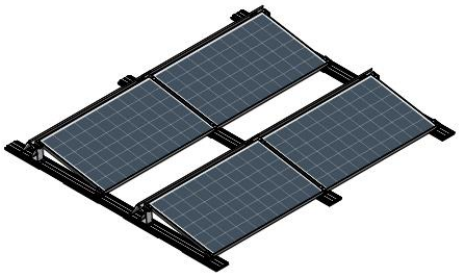

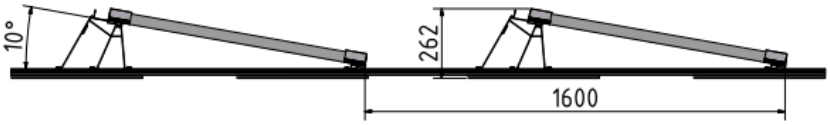

Fig. 3: AeroFix 10-S

ibc-solar.de/link/mv33

East-west orientation



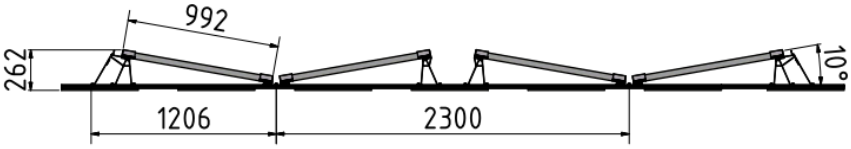

Fig. 4: AeroFix 10-EW beginning / ending with wind plates

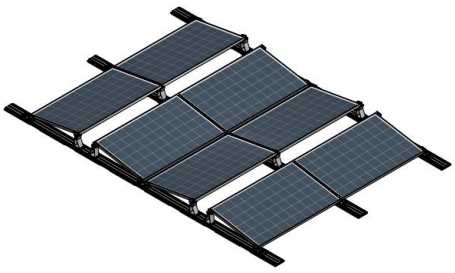

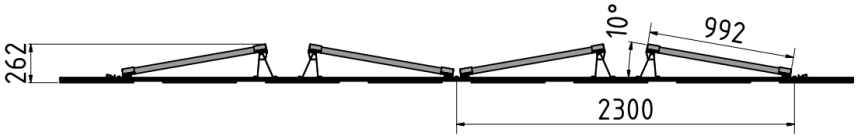

Fig. 5 AeroFix 10-EW beginning / ending with modules

4.2 AeroFlat

ibc-solar.de/link/mv42

Parallel to the roof



Fig. 6 AeroFlat

5. Technical data

IBC AeroFix	15-S	10-S	10-EW	AeroFlat
Application purpose	Flat roof	Flat roof	Flat roof	Pitched roof
Inclination (*)	15	10	10	0
Module orientation	South	South	East-west	Parallel to the roof
Permissible roof pitch (°)	0 - 10	0 – 10	0 – 10	0 - 30
Module width (mm)	950-1050*	950-1050*	950-1050*	980-1150
Module length (mm)	1630-1700	1630-1700	1630-1780***	1500-2100
Weight (kg/m²)	7	8	11	11
Linear load (kg/m) **	13	14	18	18
Center-to-center distance (m)	1.8	1.6	2.3	2 x Module width + 0,27
Minimum module field size zone H zone F and G	 none 2x3 or 3x2	 none 2x3 or 3x2	 none 2x3 or 3x2	 none 2x3 or 3x2
Maximum layout (thermal separation)	10 module x 9 rows	10 module x 10 rows	10 module x 6 V- rows + ending	14 x 14
Minimum distance to roof edge (m)	no	no	no	0,3
Material	Aluminium stainless steel	Aluminium stainless steel	Aluminium stainless steel	Aluminium stainless steel
Max. building height (m) *	25	25	25	35
Approx. space reqirement m²/kWp (1,65 x 0,99 module)	9	8	6	6

Tab. 1: Technical data

Product guarantee in accordance with complete guarantee conditions in the version valid at the time of assembly that you received from your IBC SOLAR trade partner. Guarantee assumes assembly is in accordance with applicable assembly instructions. We reserve the right to make modifications which will improve our product.

* For building height >25 m resp. >35 m, project-specific testing and ballasting by IBC is required!

** Regular weight mounting system including module (18.5 kg), without additional ballast

*** For module lengths from 1701 mm to 1780 mm, a design with module ending on both sides is only possible.

6. System planning

The planning and static calculations of AeroFix / AeroFlat flat roof systems is carried out using IBC PV Manager software or based on the checklist to be submitted with the associated module layout plan, which can be used to determine the part list and ballast plan.



The proof of the plant safety and the static load capacity of the system components have to be calculated for every single project!

Before initiating the planning phase, there must be an extensive check of the existing building and technical documentation must be completed. In particular, the constructor should be informed of any damage to the roof cladding. The functionality of existing roof waterproofing should be provided for the operating period of the new PV system to be installed.

Drainage

The customer must check that the structural condition is consistent with the design (building size, roof pitch, roof cladding, obstacles etc.).
It must be ensured at all times that rain water is discharged to drainage collection points and this should be incorporated into the planning of the PV system.

Pitched roofs

See 10. System security device

Roof covering

The AeroFix / AeroFlat flat roof system can be built on bitumen, foil, concrete gravel an green roof. Basically, the building protection mats of the base rails should lie completely on the roof skin. There should not be any objectsunder building protection mats that could damage the roof skin, e.g. sharp objects, stones etc.

For gravel roofs, the gravel should be removed from the base rails. If this is not possible because the thikness of the gravel, e.g. because the modules are coverd by the gravel, then the base rails can be laid on the gravel and shaken a little. One must ensure on site that the weight of the PV system does not push anything through the roof membrane.

For green roofs, it is recommended that a growth barrier is laid over the entire surface and glued to th joints. This prevents plants from growing in the gaps between the modules. A loss of module yield due to shade can be avoided.

Restriction of module field sizes

Due to different linear expansion coefficients for the structural profiles compared to those for the roof cladding, there may be thermal constraints on the roof waterproofing. This is excluded by restricting the module field sizes (splitting individual module fields). The thermic separations must not be between the clamping points inside a module. The center to center distance is continued normaly via the separations.

AeroFix 15-S must be separated at the latest after 9 rows and after 10 modules in the row.

AeroFix 10-S must be separated at the latest after 10 rows and after 10 modules in the row.

AeroFix 10-EW must be separated at the latest after 12 rows (6-V rows) and after 10 modules in the row. The field beginning and ending with modules is not counted as a row.

AeroFlat must be separated at the latest after 14 rows and after 14 modules in the row.

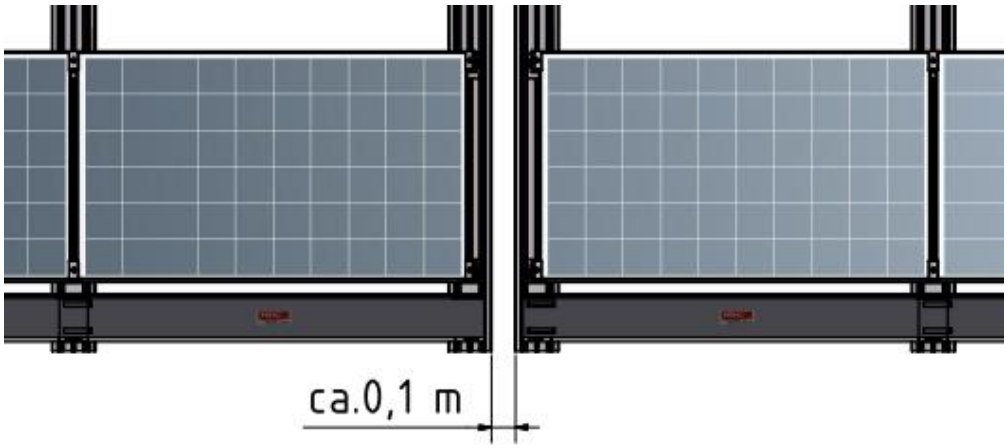

Fig. 7 thermal separation within the module row

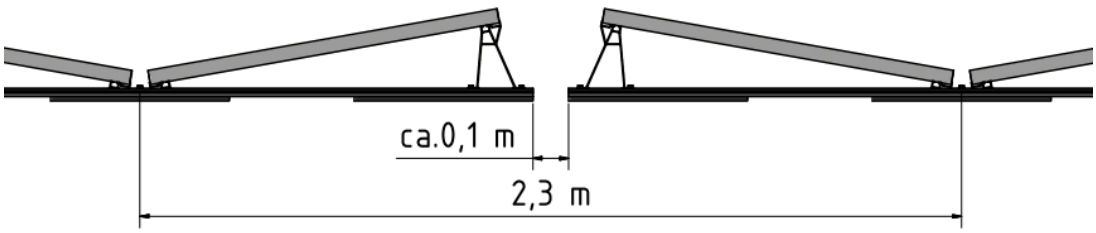

Fig. 9 AeroFix EW thermal separation between the rows

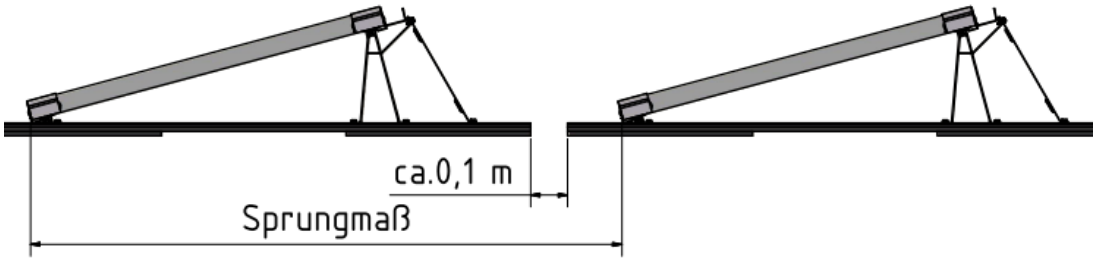

Fig. 8 AeroFix South thermal separation between the rows

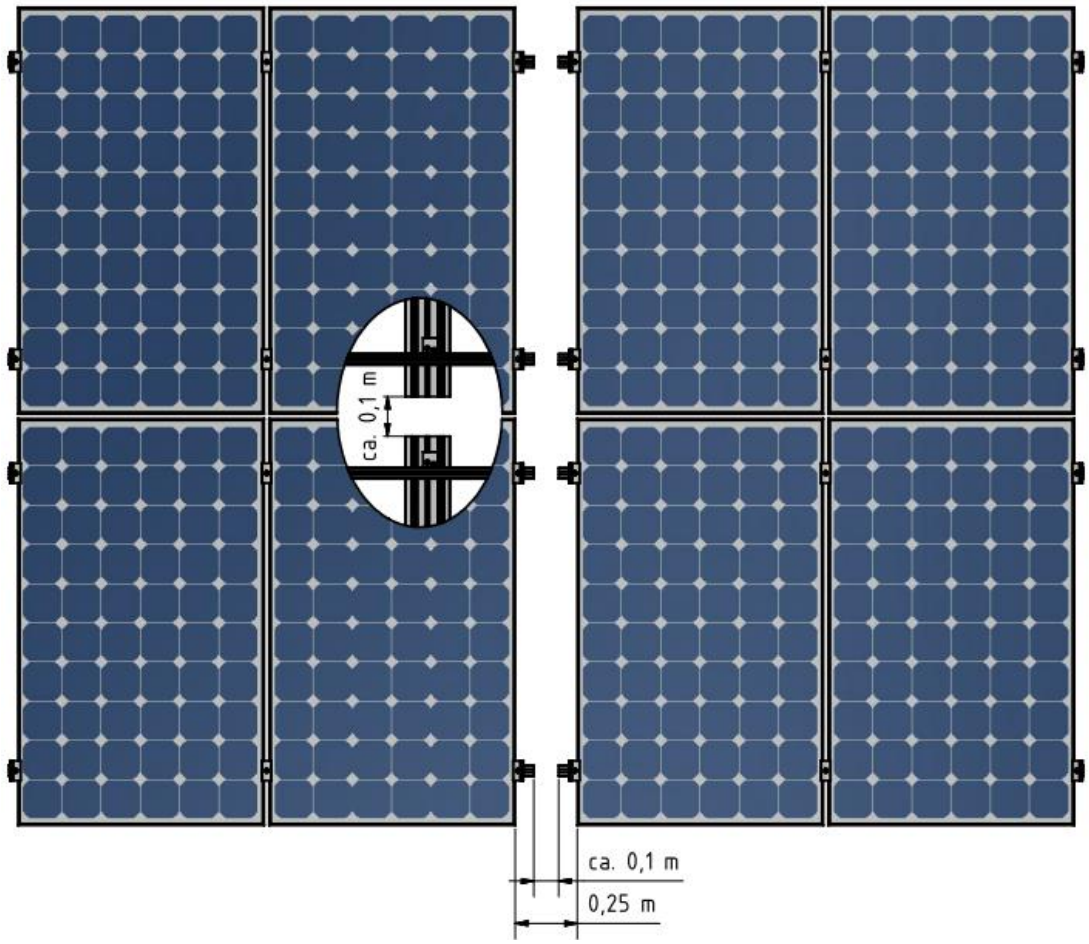

Fig. 10 AeroFlat thermal separation

Load-bearing reserve

In order to apply the additional loads from the PV system onto the roof, the load-bearing capacity of the roof and the insolation must be assured by a static expert before planning the installation of the photovoltaic system.

The surface pressure of the AeroFix base rail G2 Eco is higher than that of the AeroFix base rail G2 because of the smaller contact surface.

Important information:
The assembly system including the modules will load 7 kg/m² (11 kg/m²) to the surface of the roof.
Any additional ballast required to secure the system must also be taken into consideration in accordance with static calculations. On average, loadings of approx. 5-10 kg/m² are to be expected.

Static friction coefficients

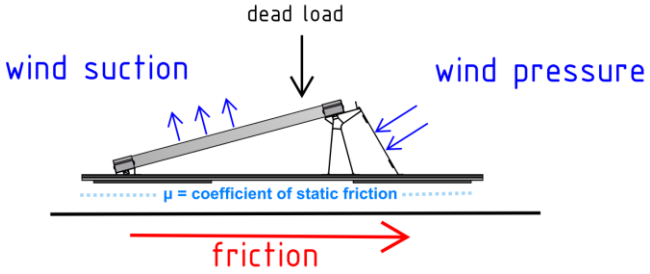

Fig. 11: Coefficient of static friction

In terms of proof of stability, analysis of the position stability must be carried out in addition to the component analysis. For this, the system must be adequately secured against lifting off and shifting. A key factor influencing the proof of position stability is the static friction coefficient μ between the solar power system and roof.

The static friction coefficient depends on the materials used, the surface condition (rough, smooth, wet, dry, weathered), the temperature, the age and the general condition of the roof waterproofing. These factors must each be incorporated into the consideration of the static friction coefficients and if necessary lead to reductions.

For preliminary planning purposes, depending on the material combination the following values can be used as an approximation:

	Fleece* (polyester)	Building protection mat (rubber-based)	Building protection mat (aluminium-laminated)
PVC	0,2	0,5**	0,5
Polyolefin (e.g. TPO)	0,2	0,5**	0,5
PE	0,2	0,5**	0,5
PVC, modified	0,2	0,5**	0,5
EVA	0,2	0,5**	0,5
Polypropylene	0,2	0,5**	0,3
Bitumen elastomer/polymer bitumen	0,6	0,6	0,2
EPDM	0,6	0,6	0,7

Tab. 2: Coefficient of static friction μ

* Fleece only partially recommended due to risk of rotting
** Only with the manufacturer's approval for roof waterproofing regarding the chemical compatibility (plasticizer migration)

Important information:
The values shown in the table are intended for preliminary planning only!
It is not possible to assess the actual existing and applicable static friction coefficients to prove position stability without on-site verification

Determining the static friction coefficients

To determine the static friction coefficient between the building protection mat and roof cladding:

- Clean roof cladding
- Place test specimen on roof cladding
- Draw the test specimen parallel to the roof using measurement device
- Record result

The testing is based on DIN EN ISO 8295 Plastics – Film and sheeting – Determination of coefficient of friction, issue October 2004.

It is necessary to carry out 10 tests, 5 in a dry state, 5 in the wet state. The arrangement of the test has to be carried out uniformly on the roof surface. Visually different roof areas should be examined separately. In this case tests have to be repeated accordingly. The roof areas where the test will be made have to be cleaned before testing. Place the specimen on the roof and wait 30 seconds afterwards. In the next step the force (F) has to be applied steadily and parallel to the centre of the specimen and measured by the dynamometer. To determine the coefficient of friction, the decisive force is the maximum force that occurs prior to the movement of the specimen.

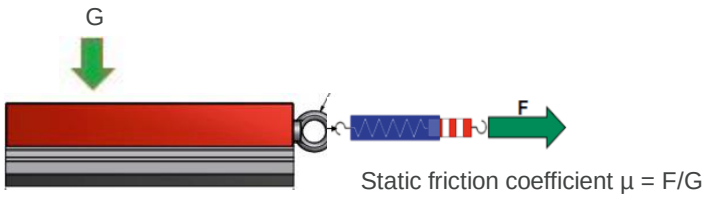

Fig. 12: : Static friction measuring device

Important information:
You can use the IBC test protocol “Determining static friction coefficients” to help you determine the static friction coefficients!

7. System design/dimensioning

Proof of the load-bearing capacity of the assembly system is based on valid EN standards. Security against slipping and lifting off (position stability) is also proven.

The aerodynamic coefficients of the entire system were calculated in a boundary layer wind tunnel in order to optimise and reduce loading on the system, in accordance with the information sheet „Information on the manufacture, planning and implementation of solar plants“ from the DIBt.

8. System installation AeroFix

Before constructing the PV system the roof must be cleared of dirt, snow and ice.

8.1 Base rails

The assembly of the base rail G2 and G2 Eco is idendical.

Measure roof and mark out edge and corner areas

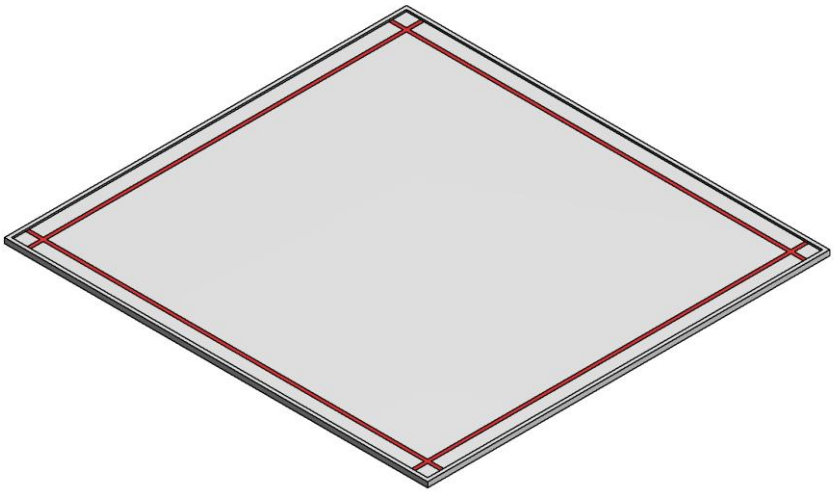

Fig. 13 Roof preperation

Install base rails with integrated building protection mat



Fig. 14 Installation base rails

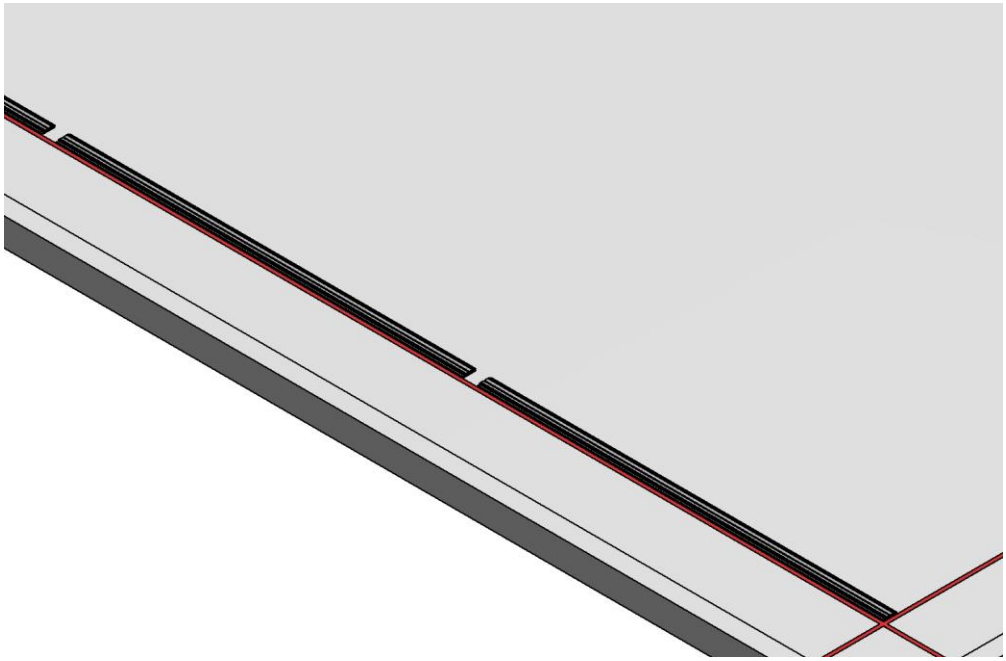

Fig. 15 Installation base rails

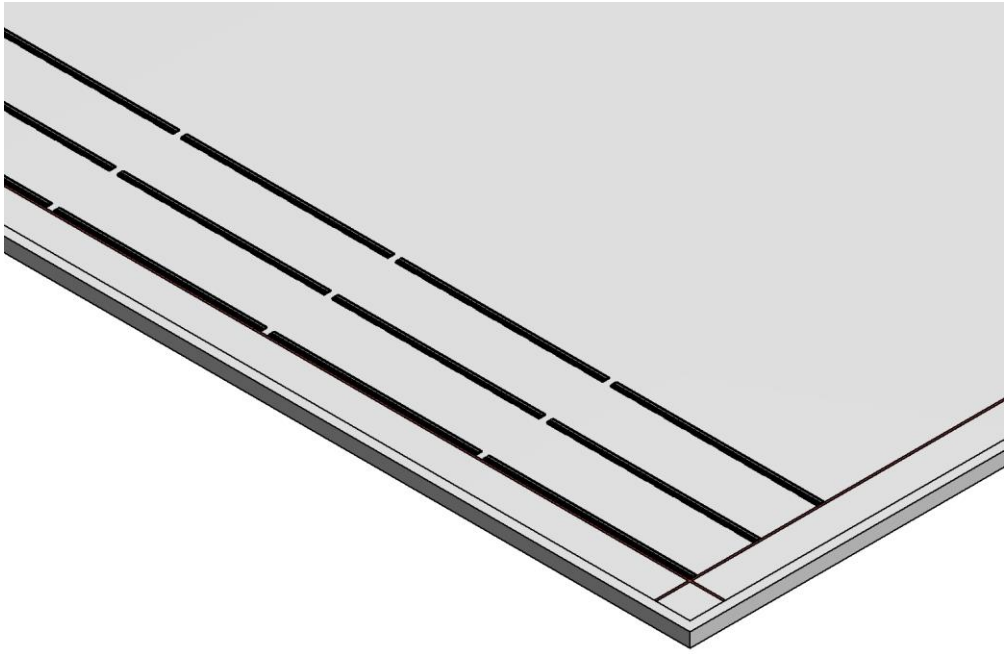

Fig. 16 Installation base rails

Extend base rails

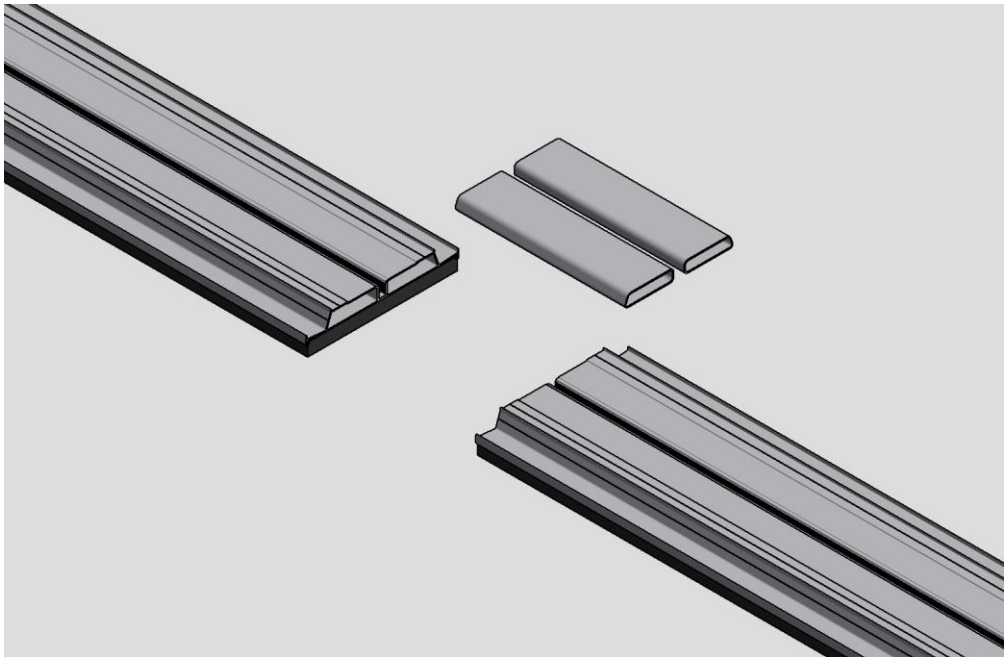

Fig. 17: Insert base rail connectors up to half-way into the base rail

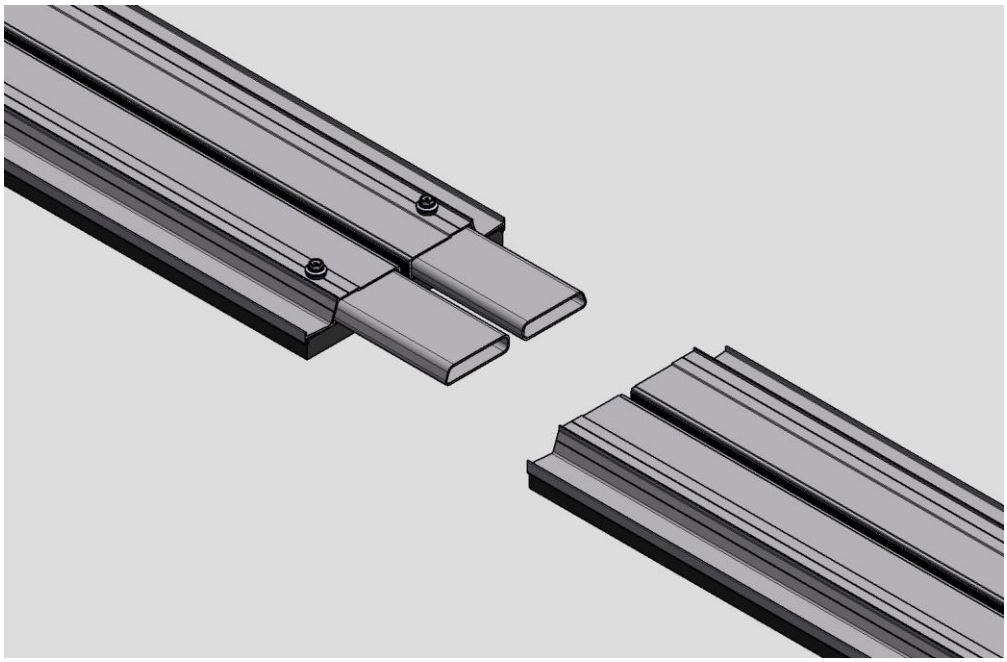

Fig. 18 Secure each base rail connector with a sheet-metal screw



Fig. 19 Join the base rails together and screw in 2 more sheet-metal screws

Base rail alignment

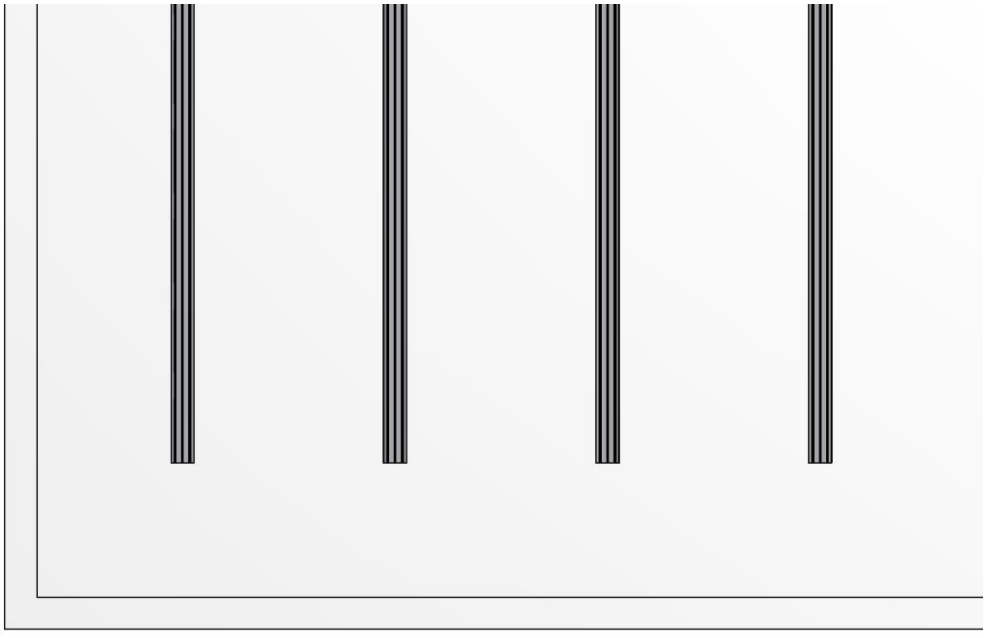

Fig. 20 Align the base rails so that they are parallel and vertical.

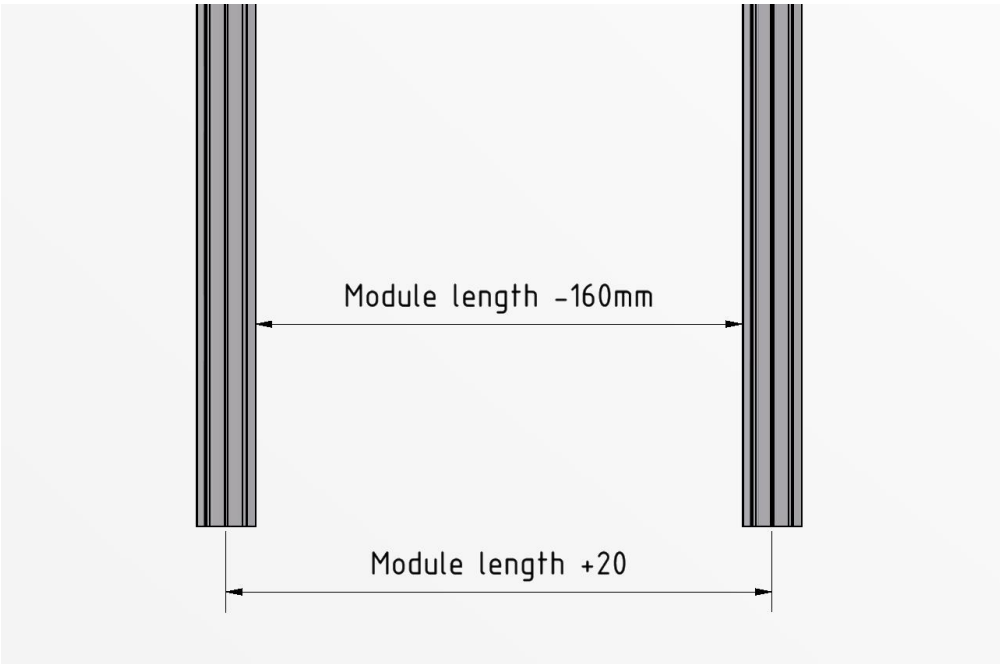

Fig. 21 Distance between base rails: module length + 20 mm or module length - 160 mm

Important information:

On very uneven roofs, it can happen that the base rail rests on the roof covering.

In this case additional protection mats must be placed. Existing building protection mats can be doubled with a building protection mat. In individual cases, two building protection mats are also permitted. Doubled building protection mats must be glued together to avoid slipping individually away. Building protection mats can be ordered separately.

8.2 Third Base rail

In order not to exceed the permissible surface pressure of the roof insulation, a third base rail may be necessary. The additional baserail with supports is placed cetrally under the modules. Module clamps are not reqired here.

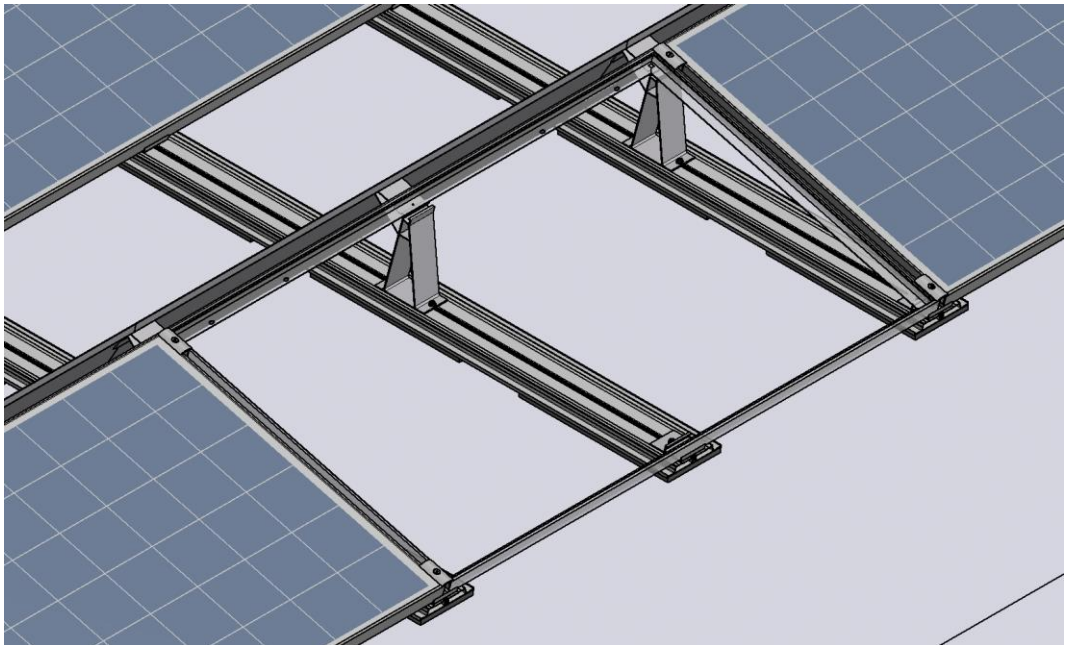

Fig. 22 Thrid base rail AeroFix10-S and 15-S

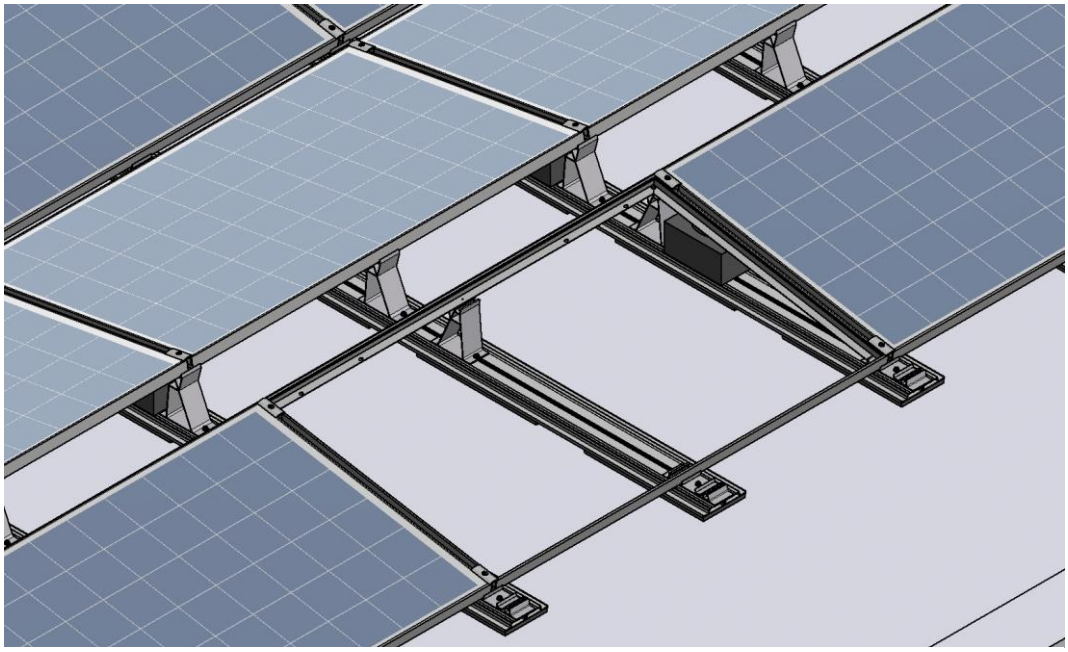

Fig. 23 Third base rail AeroFix10-EW

8.3 Supports

AeroFix Southern orientation - AeroFix 15-S / AeroFix 10-S

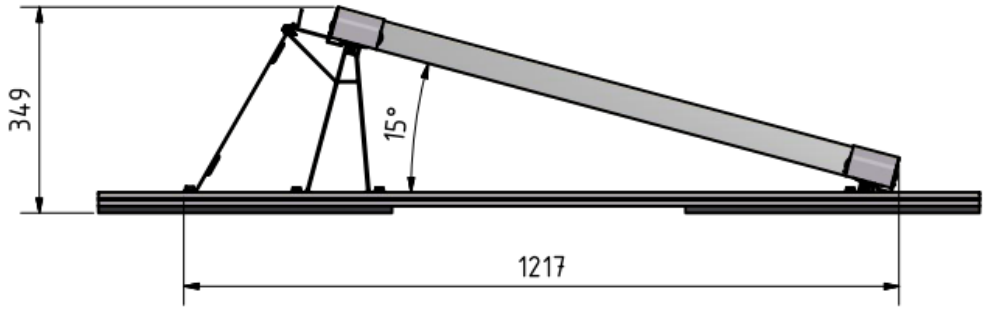

Fig. 24 AeroFix 15-S Dimensions

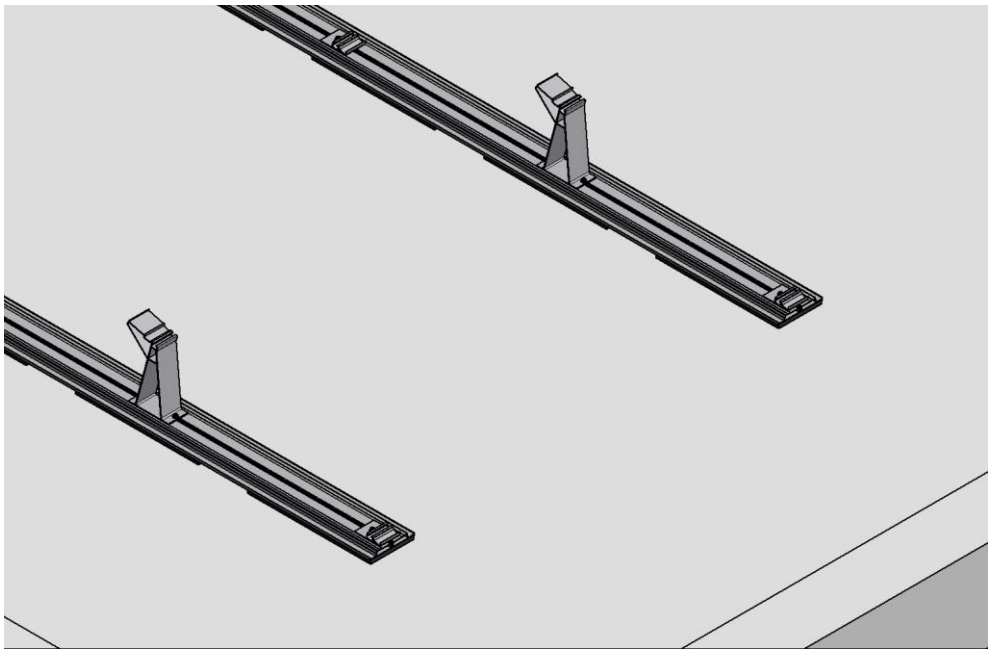

Fig. 25 AeroFix 15-S „Support top“ and „support bottom“

Determining the position of the supports

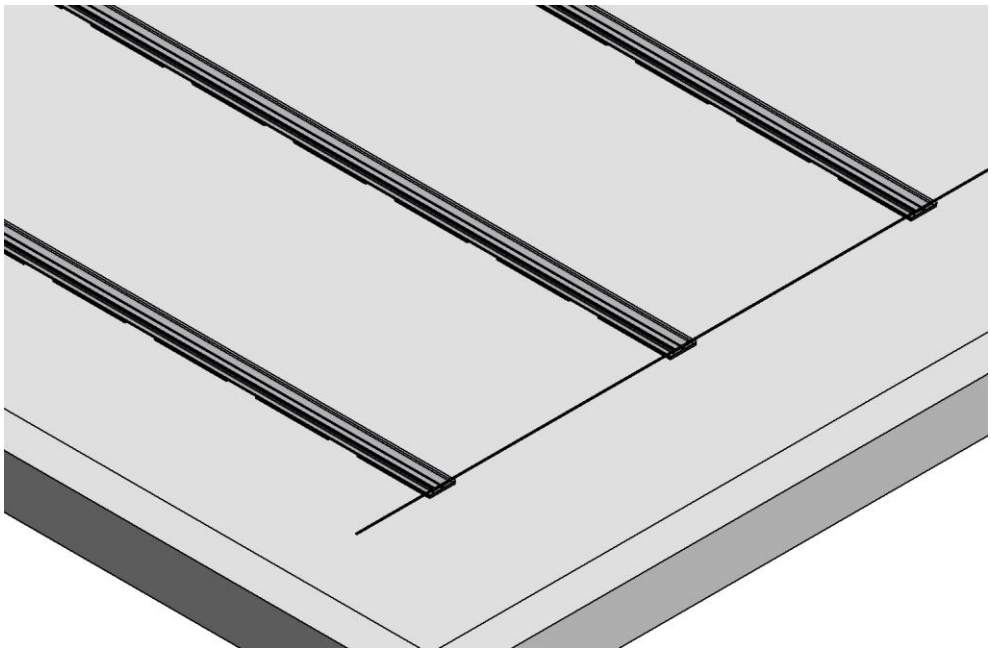

Fig. 26 Mark out „support bottom“.

AeroFix 10-S / 15-S: “Support bottom” must be laid out completely on the base rail.

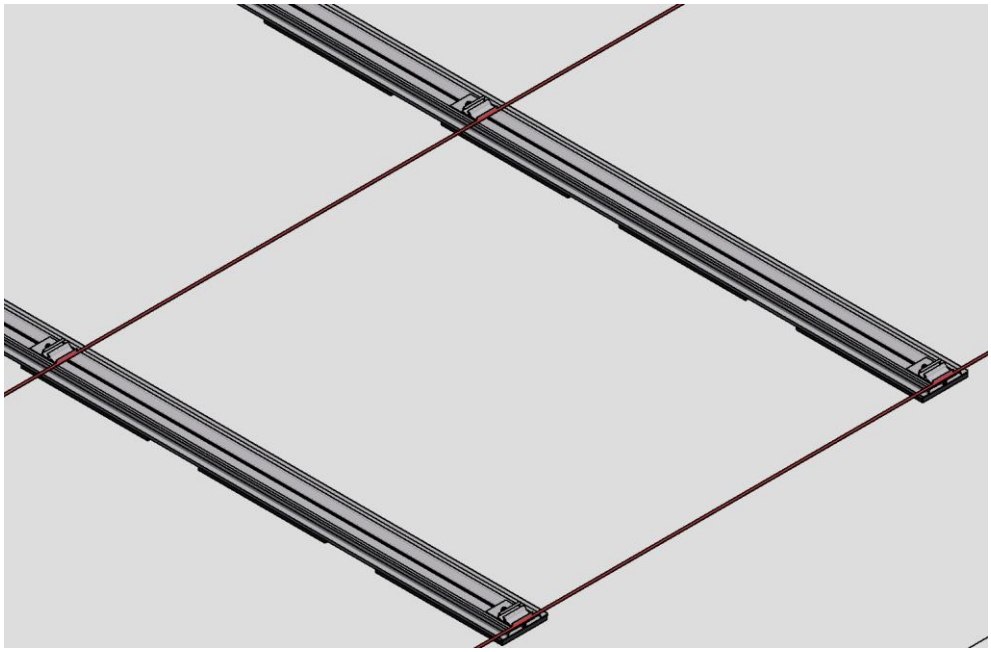

Fig. 27 Standard grid spacing, or mark out individual spacing

AeroFix 15-S: 1,8m (1,62m – 1,98m)
AeroFix 10-S: 1,6m (1,44m – 1,76m)

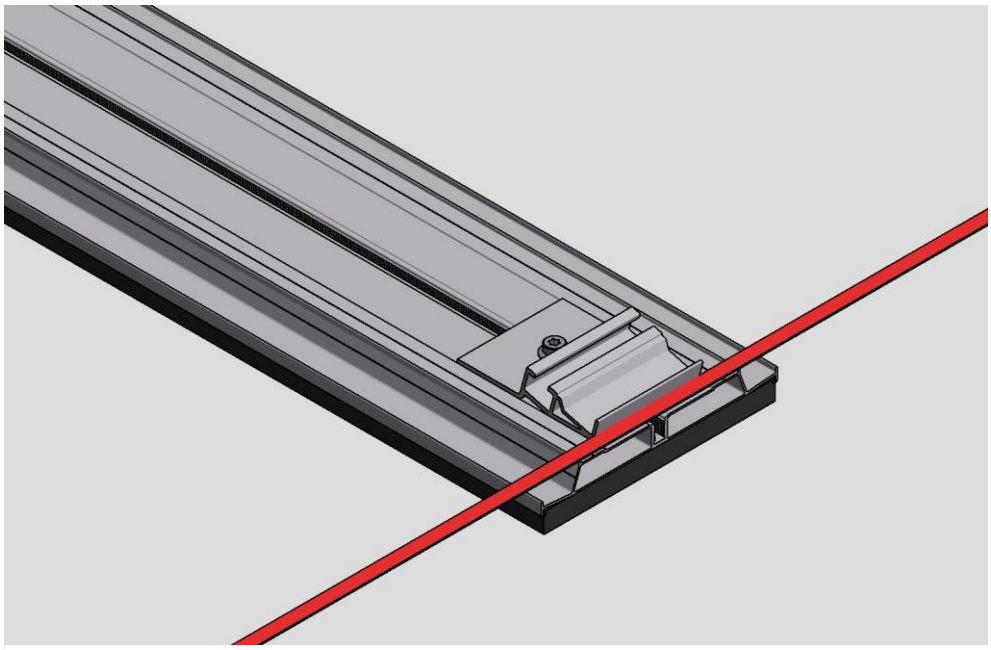

Fig. 28 Screw the „support bottom“ onto the base rail on the marking with screw M8x16

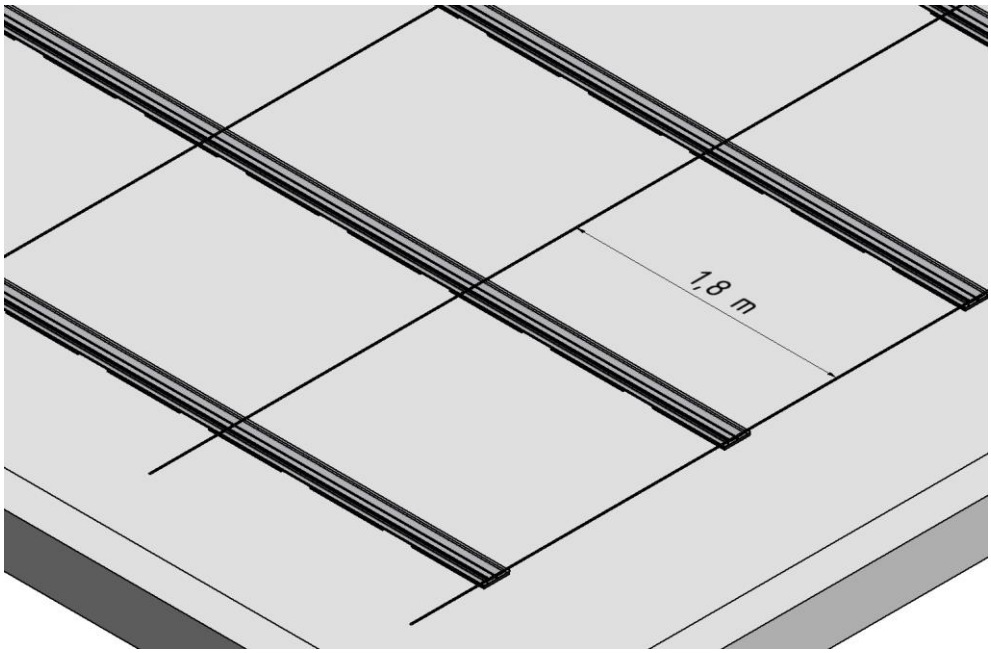

Fig. 29 Mounted „support bottom“

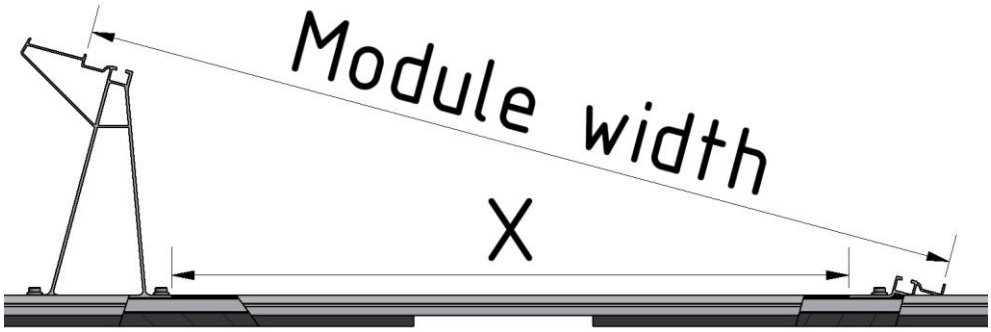

Fig. 30 AeroFix 15-S, Screw „support bottom“ onto the base rail at „x“ distance with 2 M8x16 screws

Distance between supports AeroFix 15-S	
Module width	Distance x
950 mm	715 mm
960 mm	725 mm
970 mm	736 mm
980 mm	746 mm
990 mm	756 mm
1000 mm	767 mm
1010 mm	777 mm
1020 mm	787 mm
1030 mm	797 mm
1040 mm	807 mm
1050 mm	818 mm

Tab. 3: AeroFix 15-S, Distance between „support top“ and „support bottom“

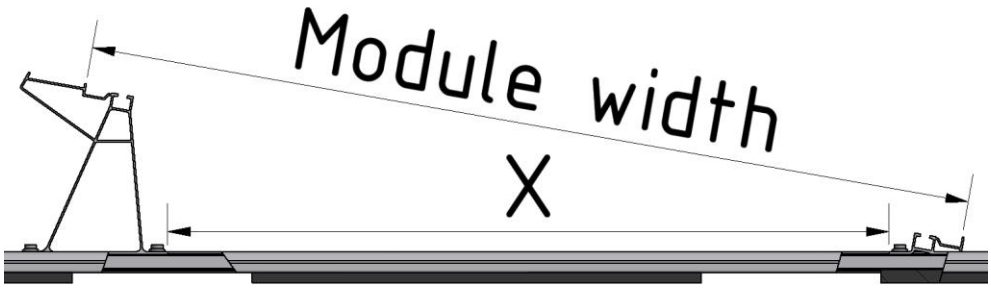

Fig. 31 AeroFix 10-S, Screw „support bottom“ onto the base rail at „x“ distance with 2 M8x16 screws

Distance between supports AeroFix 10-S	
Module width	Distance x
950 mm	763 mm
960 mm	773 mm
970 mm	783 mm
980 mm	793 mm
990 mm	803 mm
1000 mm	813 mm
1010 mm	823 mm
1020 mm	833 mm
1030 mm	843 mm
1040 mm	854 mm
1050 mm	864 mm

Tab. 4: **AeroFix 10-S, Distance between „support top“ and „support bottom“**

Attaching the ballast rail

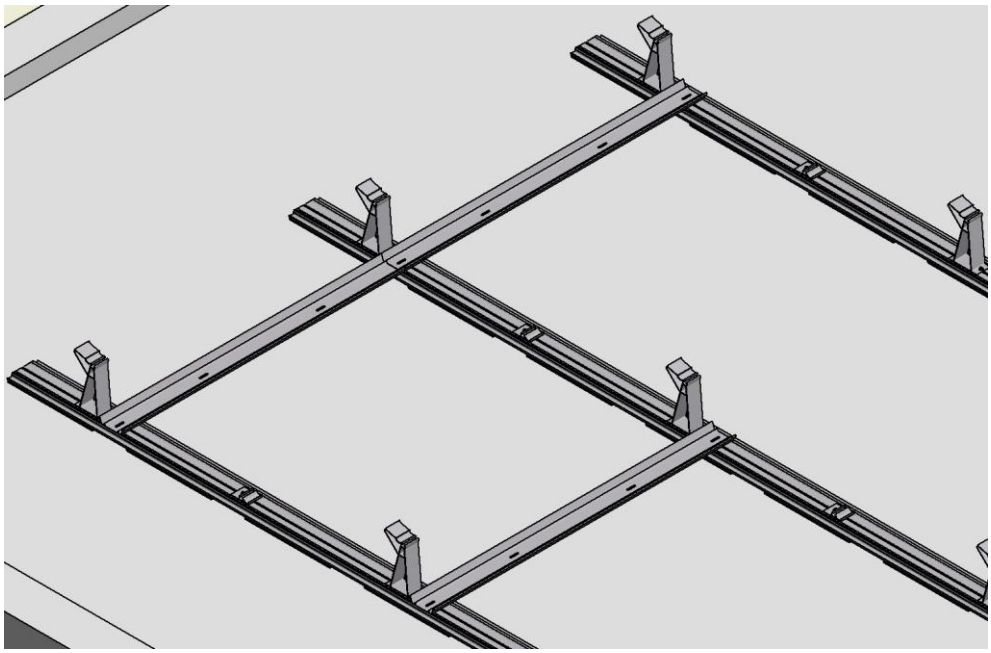

Fig. 32 The ballast rail is attached directly in front of the „support top“ and secured onto the base rail with 2 M8x16 screws

The number and position of the ballast rail is determined by the static calculations for the project. See more at chapter “8.4”

AeroFix East-west orientation - AeroFix 10-EW

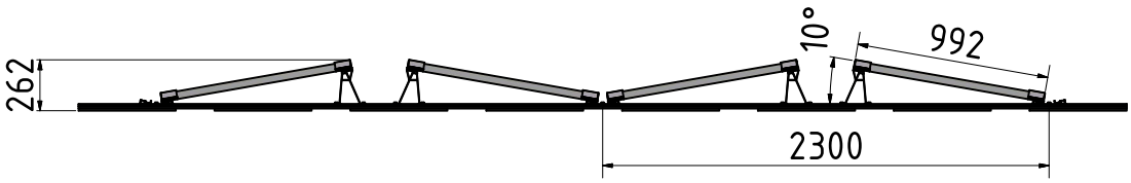

Fig. 33 AeroFix 10-EW with module finish

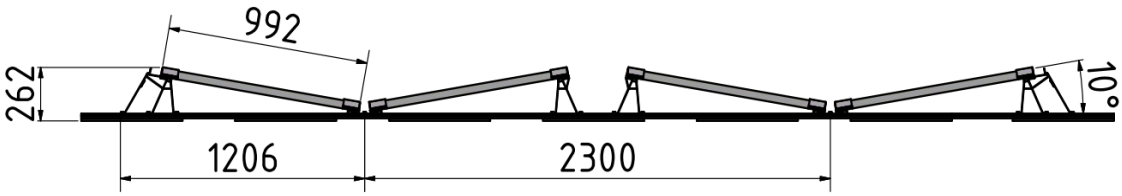

Fig. 34 AeroFix 10-EW with wind plate finish

Determining the position of the supports

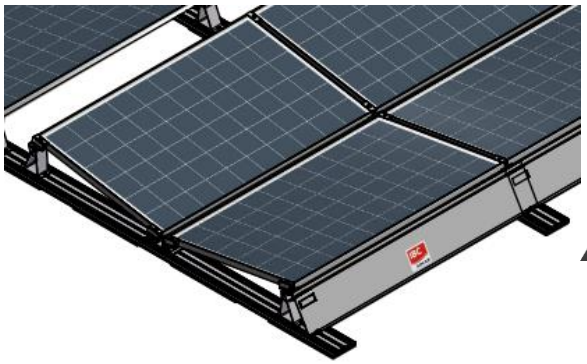

Define the position of the „lower support“. The distance from the leading edge of the base rail to the „support bottom“ must be at least 1250 mm when using a wind deflector.

Important information:
If you end with a wind plate you will need the AeroFix 10-S “support top” instead the AeroFi 10-EW “support top”

Fig. 35 AeroFix 10 with wind deflector finish

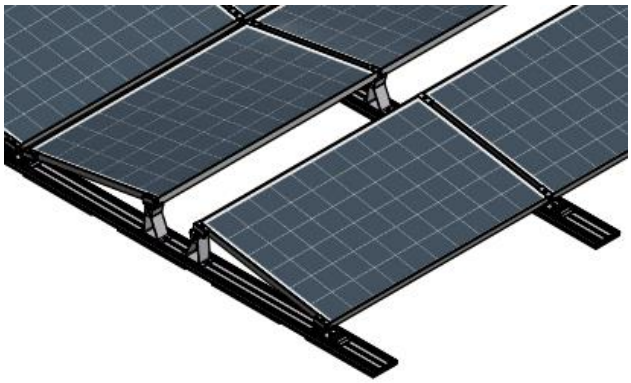

Define the position of the “lower support”. The “support bottom” must be fully supported on the base rail.

Fig. 36 AeroFix 10 with module finish

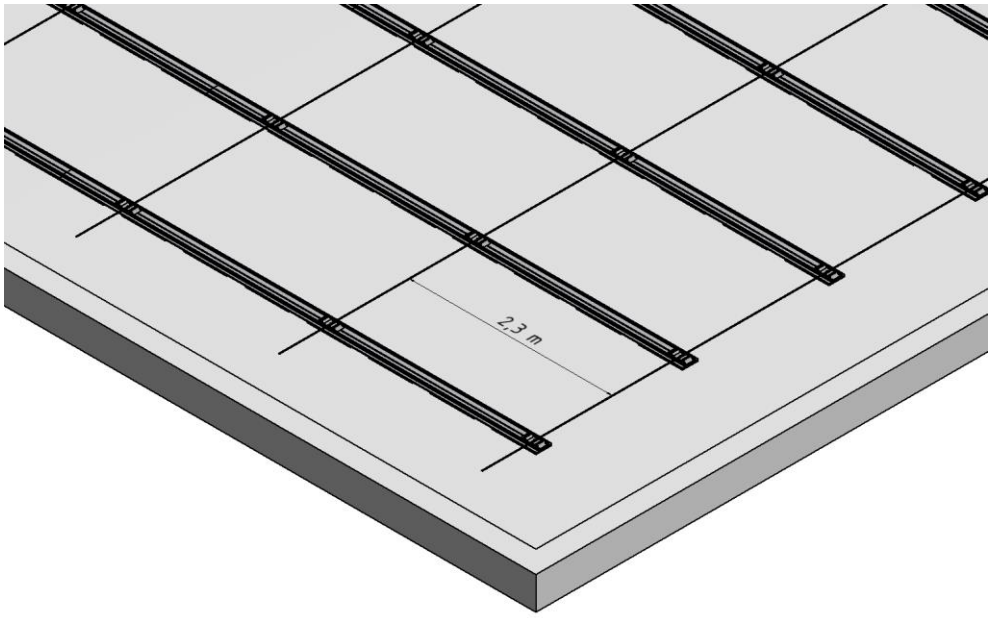

Fig. 37 Standard grid spacing 2.3 m

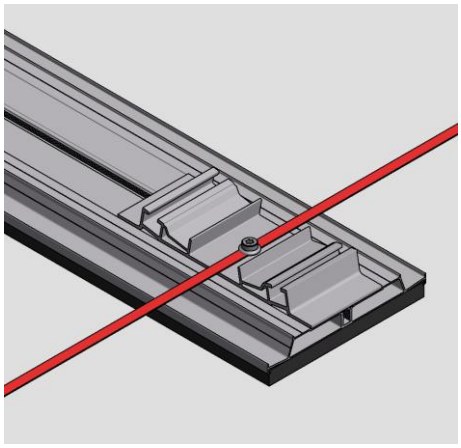

Fig. 38 Screw the “support bottom” into the base rail on the marking with screw M8x16

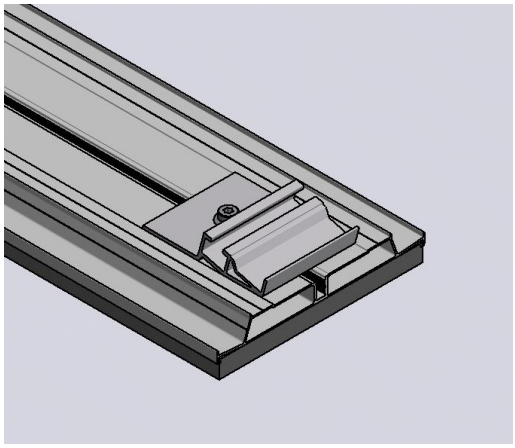

Fig. 39 At module finish the AeroFix 10-S “Support bottom” will be mount

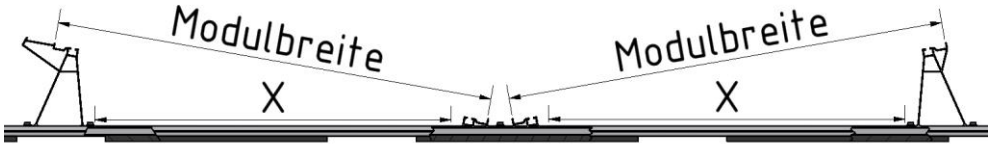

Fig. 40 Screw “supports top” onto the base rail at “x” distance with 2 M8x16 screws

Distance between supports	
Module width	Distance x
950 mm	763 mm
960 mm	773 mm
970 mm	783 mm
980 mm	793 mm
990 mm	803 mm
1000 mm	813 mm
1010 mm	823 mm
1020 mm	833 mm
1030 mm	843 mm
1040 mm	854 mm
1050 mm	864 mm

Tab. 5: Distance between “support top” and “support bottom“

Attaching the ballast rail

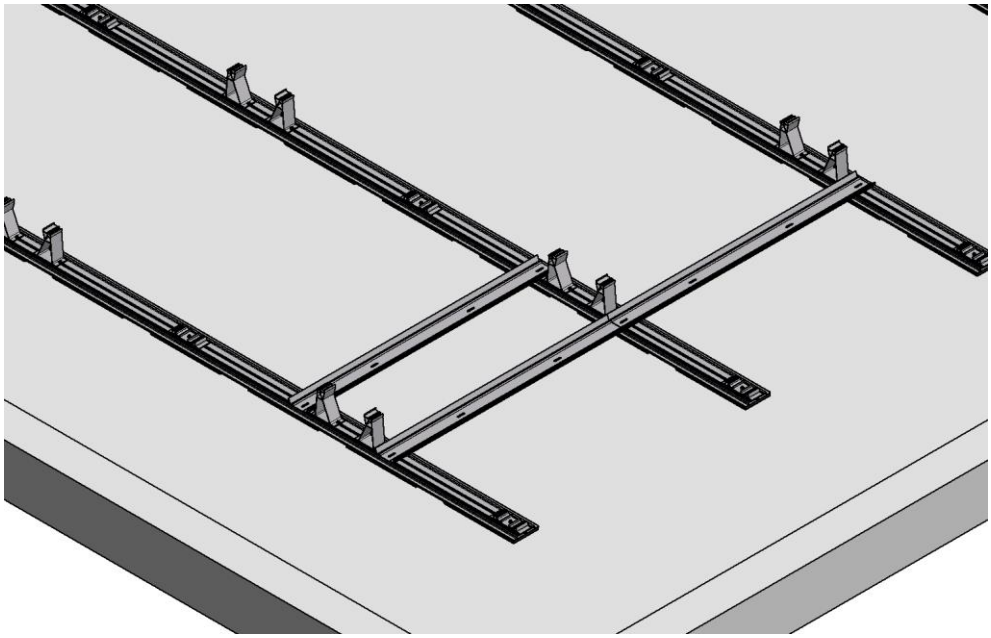

Fig. 41 The ballast rail is attached directly in front of the „support top“ and secured onto the base rail with 2 M8x16 screws

The number and position of the ballast rail is determined by the static calculations for the project. For more information on ballast please refer to chapter „8.4“.

8.4 Ballast

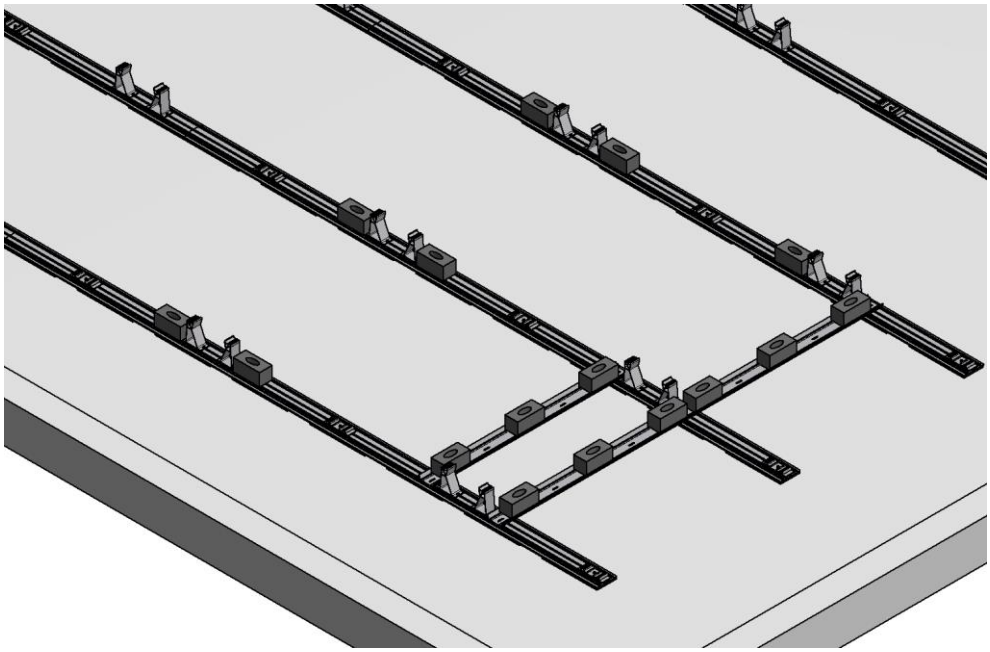

Fig. 42 AeroFix 10-EW ballast with ballast rail and base rail

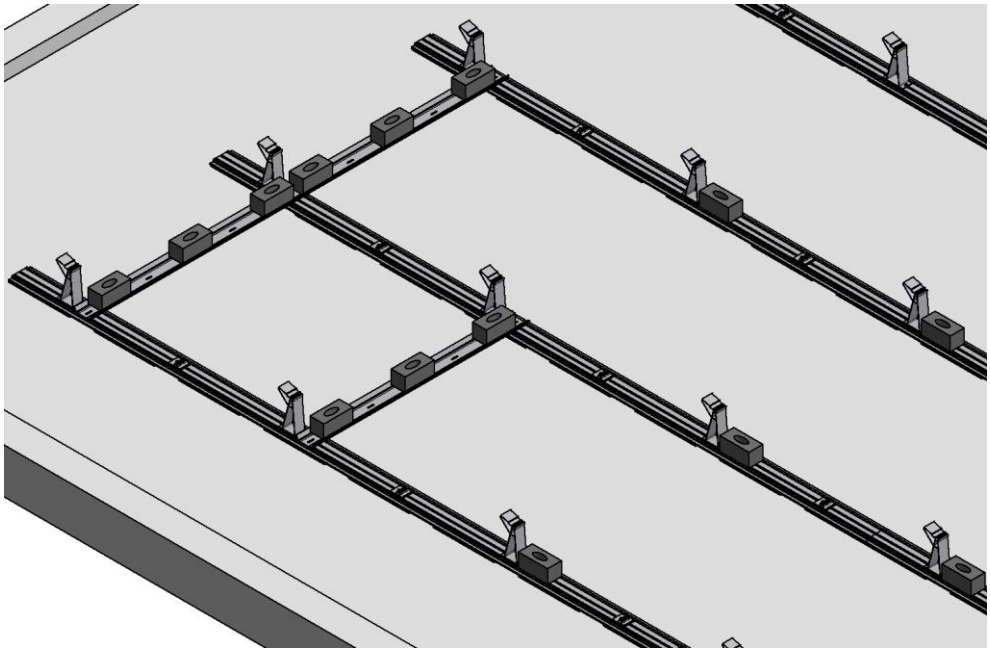

Fig. 43 AeroFix 15-S, AeroFix 10-S ballast with ballast rail and base rail

Important information:

When adding ballast to the base rail it is not permitted to completely seal the space between the base rail and the module with ballast stones!

Important information:
We recommend that you use stones with the following measurements (w x l x h):

- NF 11,5 x 24 x 7,1 cm
- 2DF 11,5 x 24 x 11,3 cm
- 3DF 17,5 x 24 x 11,3 cm
- Stone 40 x 40 x 4 cm

The ballast should always be placed under the module. The max. ballasting potential on the base rail is and corresponds, in the above-mentioned blocks, the AeroFix 15-S (AeroFix 10-S / AeroFix 10-EW):

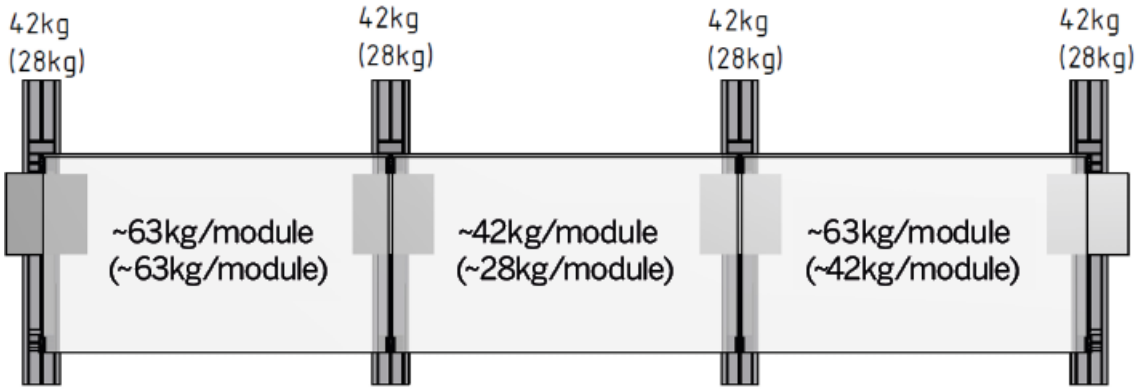

Fig. 44: Ballasting oft he base rail

If the system has to be loaded with more than 42 kg (28 kg) per module a ballast rail is necessary.

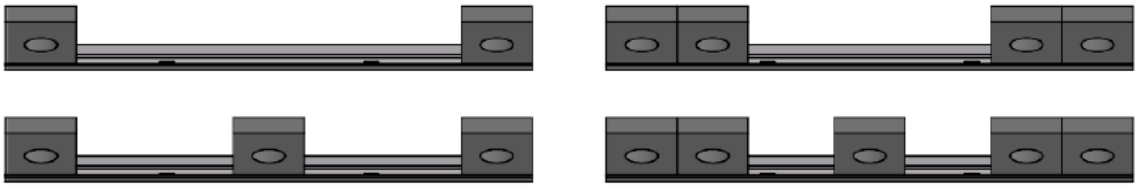

Fig. 45: Assignment of ballast rail

The assignment of the ballast track should always be done from the outside inward. When using the ballast stones recommended here, a maximum weighting of up to 120 kg/module is possible when the ballast rail is used in combination with the base rail.

Important information:
When using alternative ballast rails (i.e. L-profiles) and alternative ballast materials (i.e. concrete slabs) the adequate corrosion protection and frost resistance of materials is to ensure!

8.5 Snow load rail

The snow load rail for all mounting support is required, if the allowed snow load on the modules is exceed in corner clamping. The snow load rail is inserted in the mountuing supports and is fixed with clips on the module. The clips do not replace the module clamp. The installation instructions and maximum allowed loads of the respective solar module manufacturers must be exactly kept.

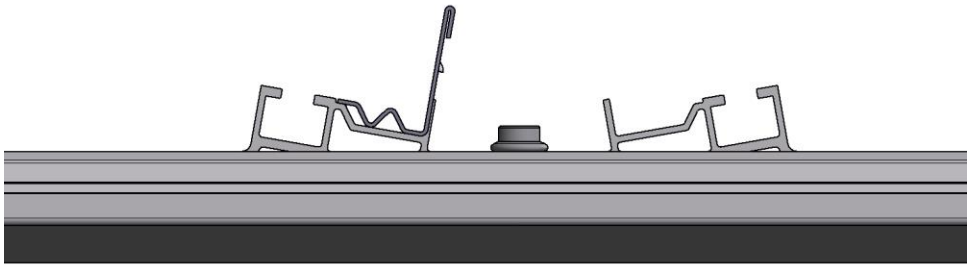

Fig. 46 Snow load rail in the "support bottom"

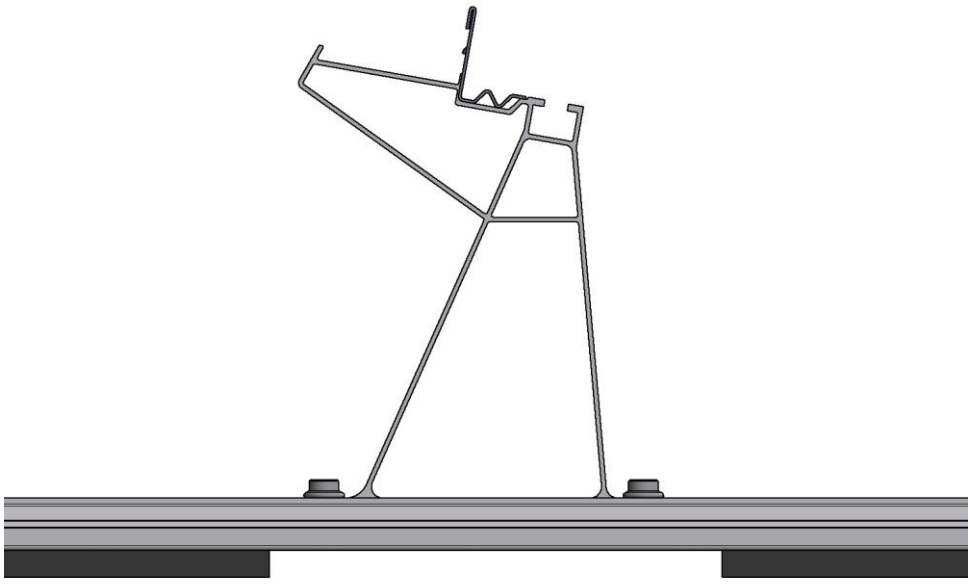

Fig. 47 Snow load rail in the "support top"

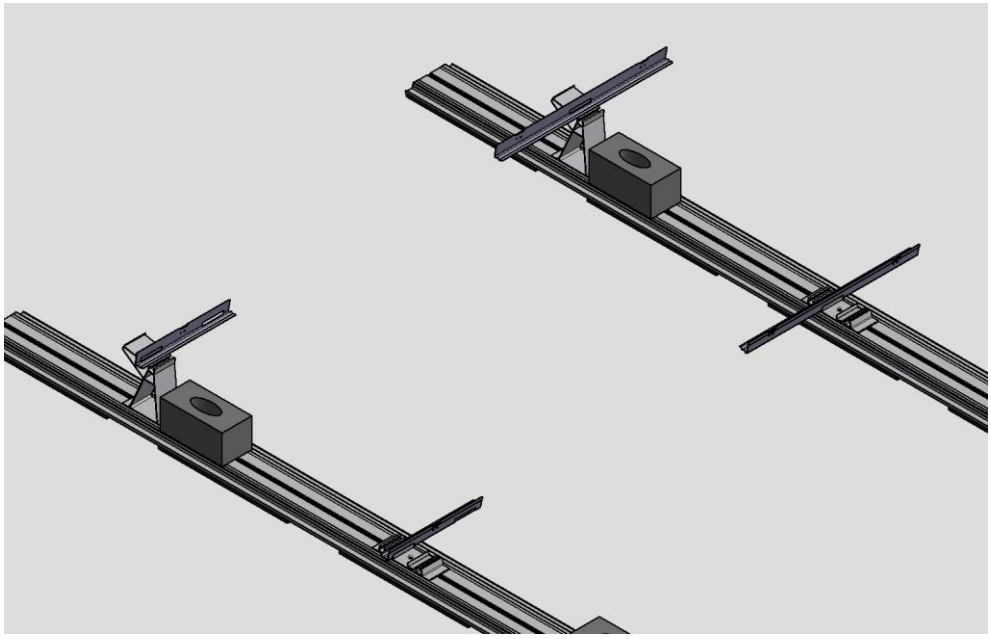

Fig. 48 Short and long snow load rail

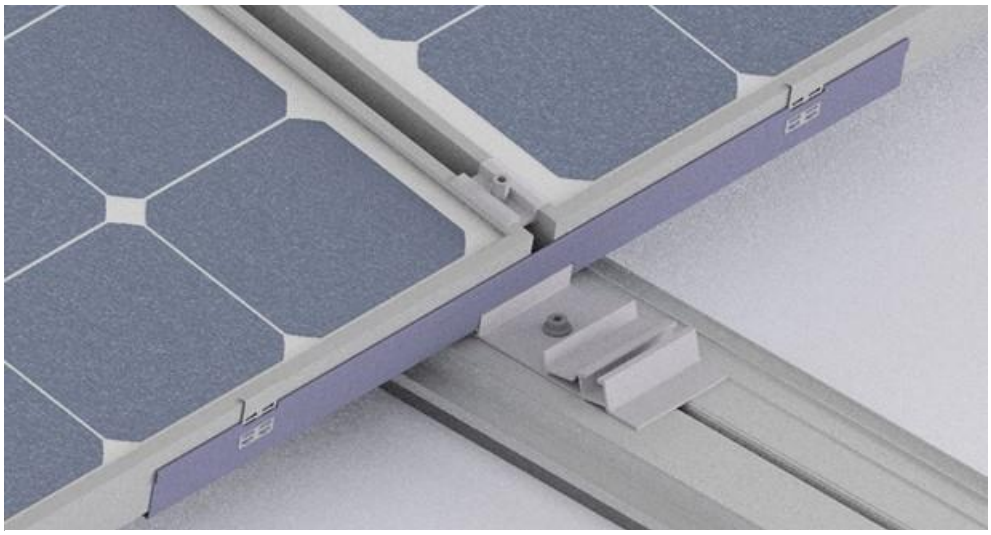

Fig. 49 Snow load rail long with 2 clips and G5 middle clamp

Important information:

The snow load rail can only be installed with the middle clamp G5 and at the end of the row with the EC adapter. The clips of the sno load rail do not replace the module clamps.

The surface pressure on the insolation is increased and must also be checked here.

8.6 Module assembly

The procedure for installing “AeroFix10-S / AeroFix 10-EW” is identical to that of „AeroFix 15“.

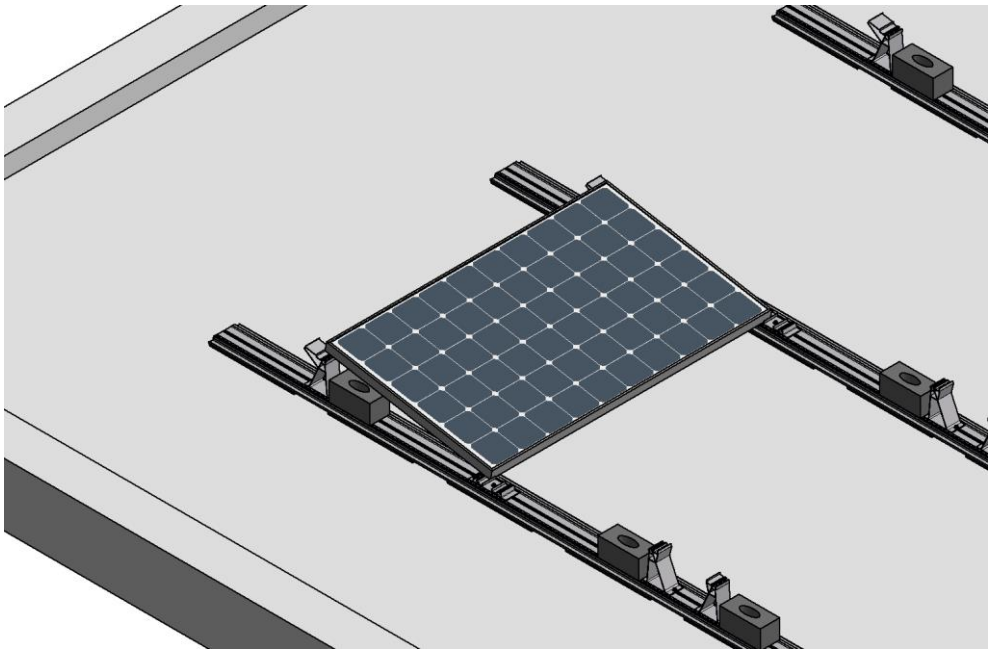

Fig. 50 Insert the module into the “support top” and “support bottom“

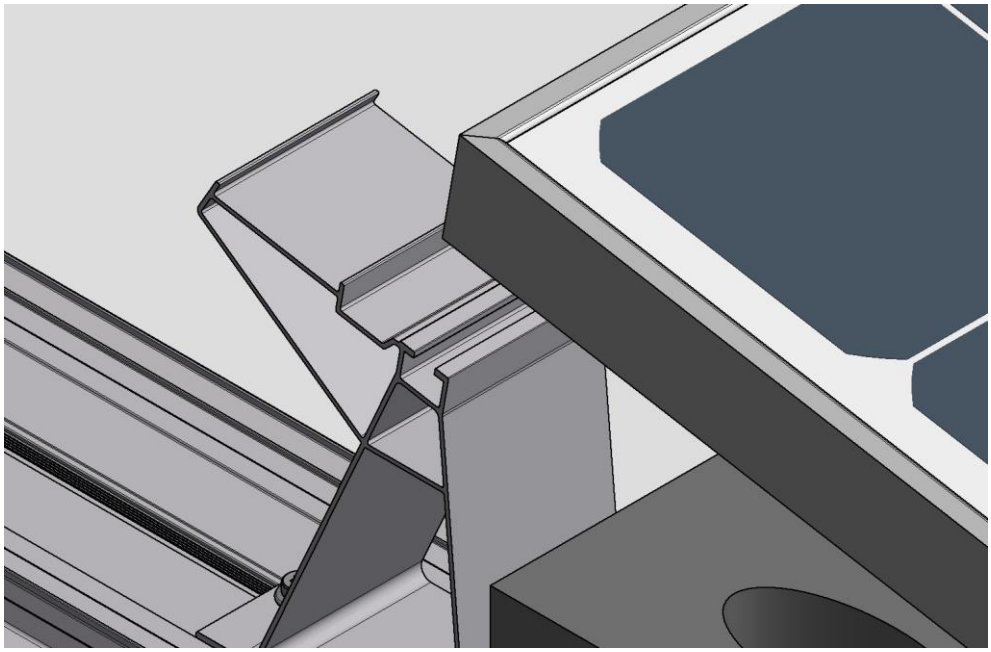

Fig. 51 The module must lie flat against the end stop on the “support top“ (with wind plate mounting)

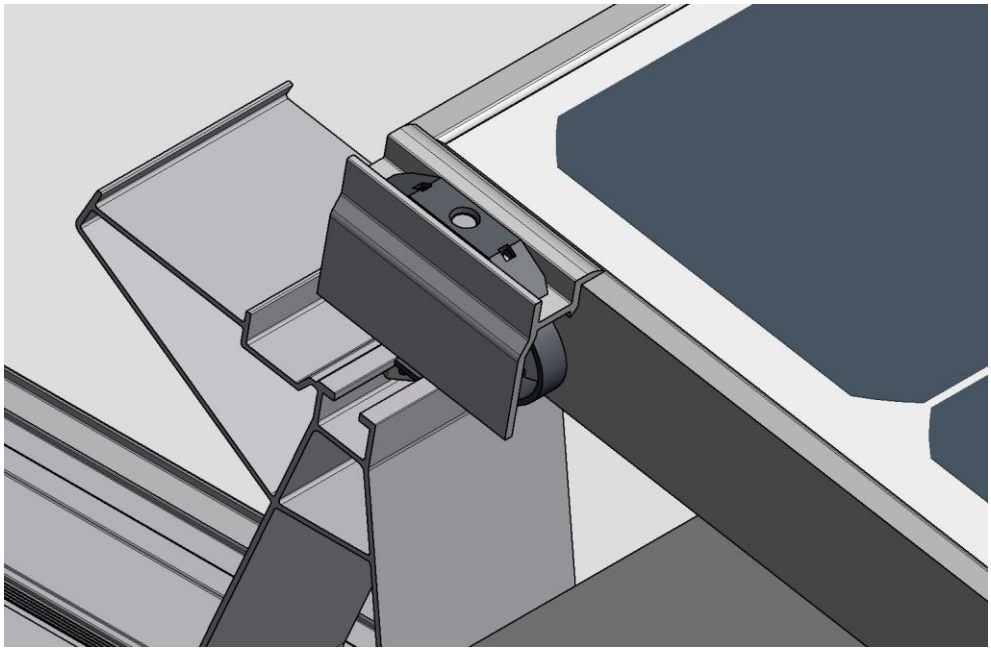

Fig. 52 Module on the end stop and clamped

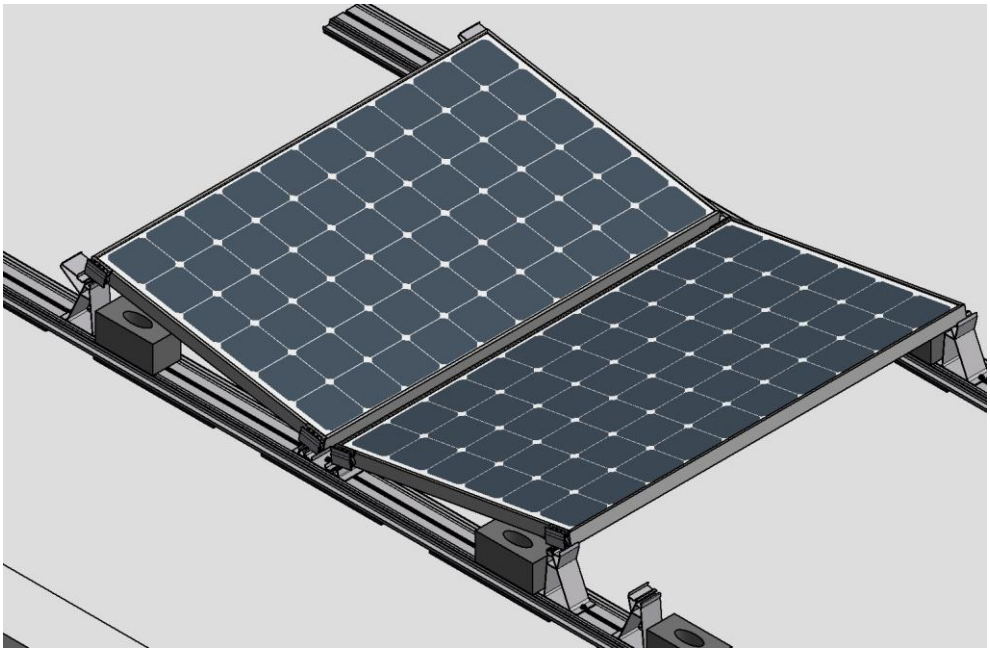

Fig. 53 Lay out the modules and attach using module clamps (in front “support top” without wind plate mounting)

Ensure that a distance of 65 mm is maintained between the module frame and the rear panel of the upper support. Beginning with the outer clamps, tighten the modules to a torque of 15 Nm. For this we recommend a torque wrench with Torx bit size TX40.

The middle and outer clamp are delivered pre-assembled. The middle clamp G3 covers a clamping area of 30-50 mm. However the outer clamp G3 must be ordered for each module height.	 G3 Middle and outside clamp
The middle clamp G5 covers a clamping area of 30-40 mm. The EC adapter G2 is installed with the middle clamp G5 and Secure clip for EC adapter / cable guide and replaces the traditional outer clamp.	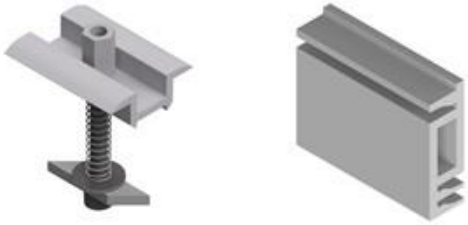 G5 middle clamp and EC adapter G2

Important information:

Depending on the height of the module frame, a different version of the outer clamp G3 will be required.

The EC adapter G2 for G5 middle clamp covers only the frame sizes 30, 32, 35, 38 und 40 mm.

Important information:

- The tightening torque of the G3 clamps is 15 Nm!
- The tightening torque of the G5 clamps is 10 Nm!

Do not use a ratchet or a wrench with high leverage as the maximum tightening torque could easily be exceeded.

Please only use a Torx screwdriver with T-handle or cordless screwdrivers with the appropriate torque settings.

The middle and outer clamps G3 can be inserted into the supports directly from above where required.

1. Insert 2. Press 3. Fixed

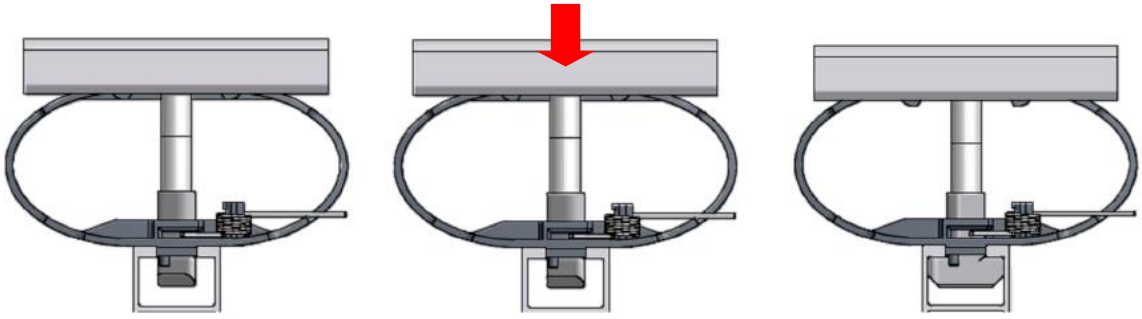

Fig. 54: Inserting the middle clamp G3

The middle clamps G5 can be inserted into the supports directly from above where required.

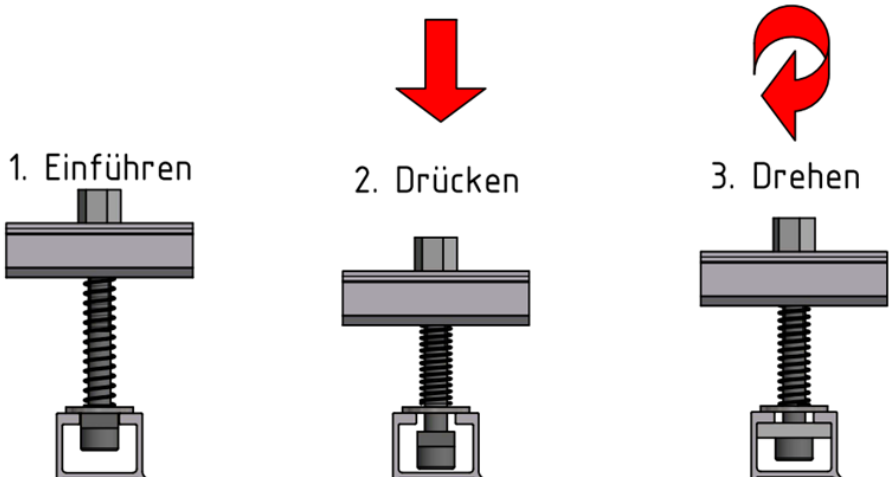

Fig. 55 Inserting the middle clamp G5

The adaptor EC is clamped by the given frame height with the middle clamp G4 and substitutes thus the end clamp. Secure clip for EC adapter / cable guide fixes the AK adapter to the middle clamp G5.

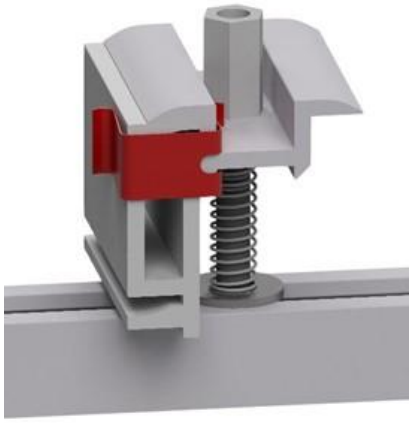

Fig. 56 EC adapter with middle clamp G5 and secure clip

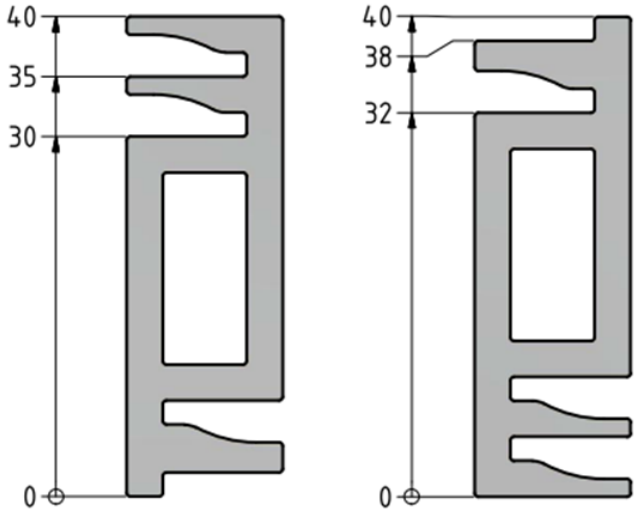

Fig. 57 EC adapter G2 frame hights

8.7 Wind plate assembly

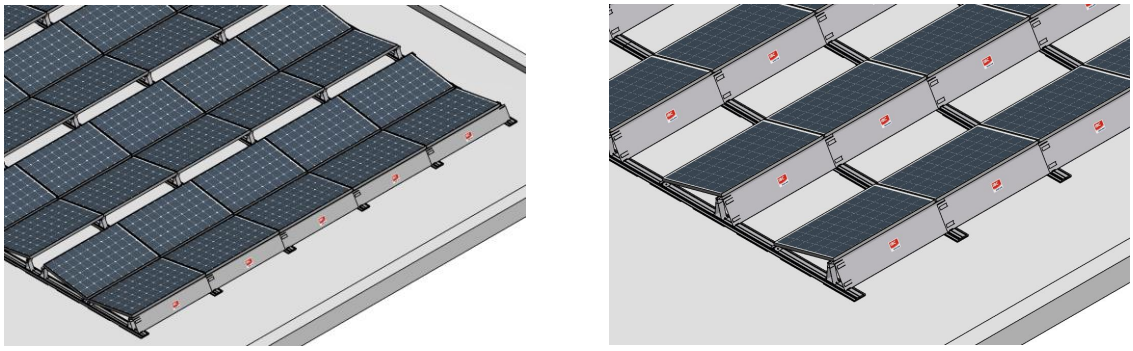

Fig. 58 Mounted wind plate

Beginning with the rear side of the left module row, mount the wind plate on the supports. Screw the left side of the wind plate to the base rail with screw M8x16. Slide the wind deflector for the next module sideways on the previously mounted plate and mount onto the next support. Ensure that the lateral tabs clasp the wind plate. Screw both plates onto the base rail. The gap between screw and end of the base rail should be at least 3 cm. Repeat process with the other wind plates in the row.

The first and last wind plates in the module row or single wind plates have to be attached with a sheet-metal screw to the support (Fig. 63) .

For AeroFix 10-EW, wind plates and AeroFix 10S “support top” are only required on the modules if

- the first/last row begins/ends with an “support top”
- individual modules are omitted with a module field

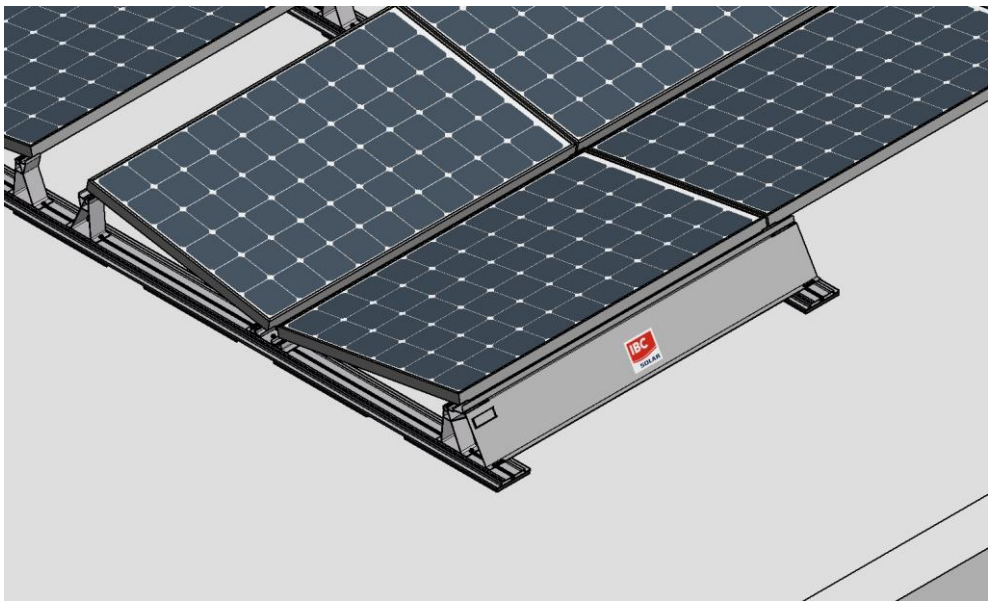

Fig. 59 Wind plate assembly starting from the left

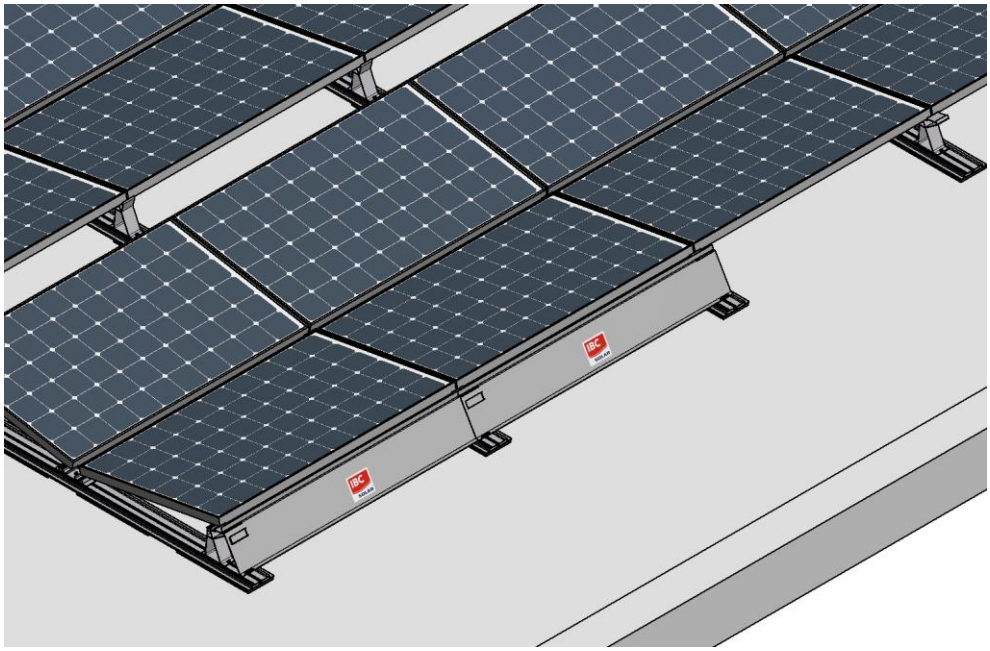

Fig. 60 Wind plate assembly starting from the left

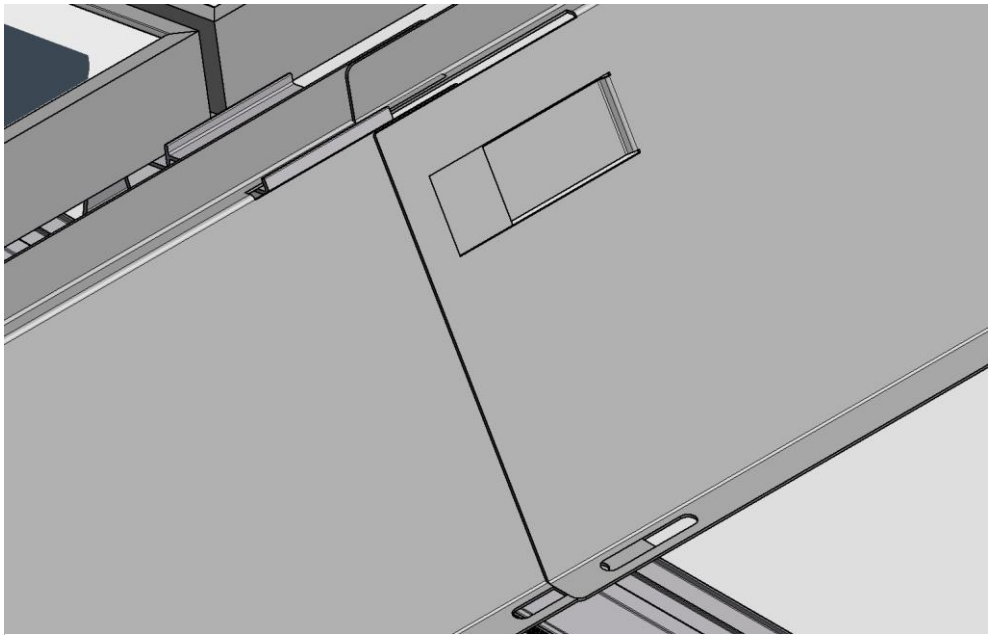

Fig. 61 Insert wind plate

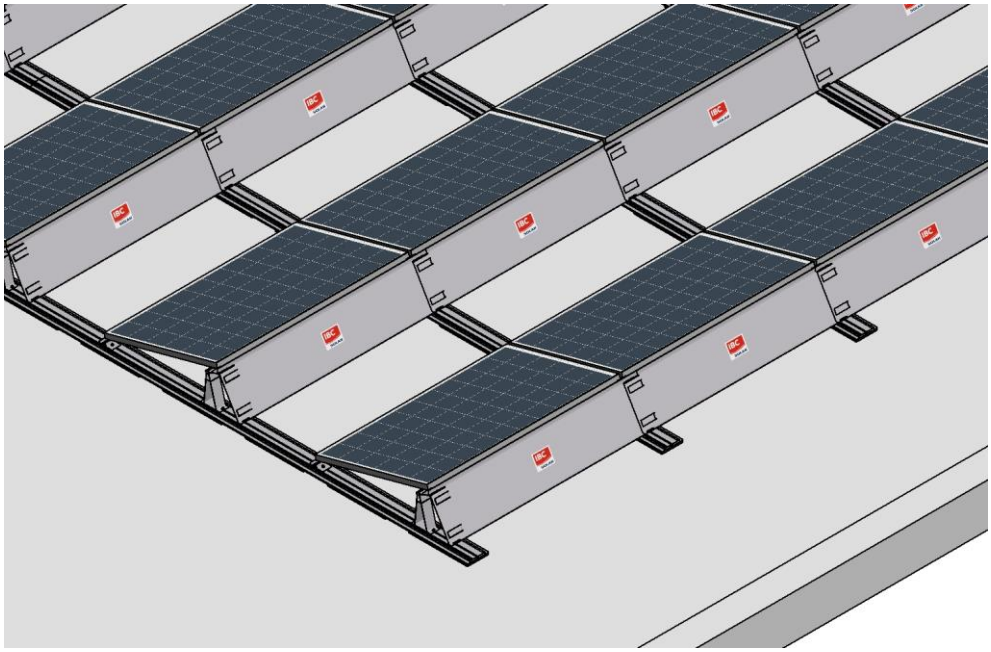

Fig. 62 Wind plate assembly

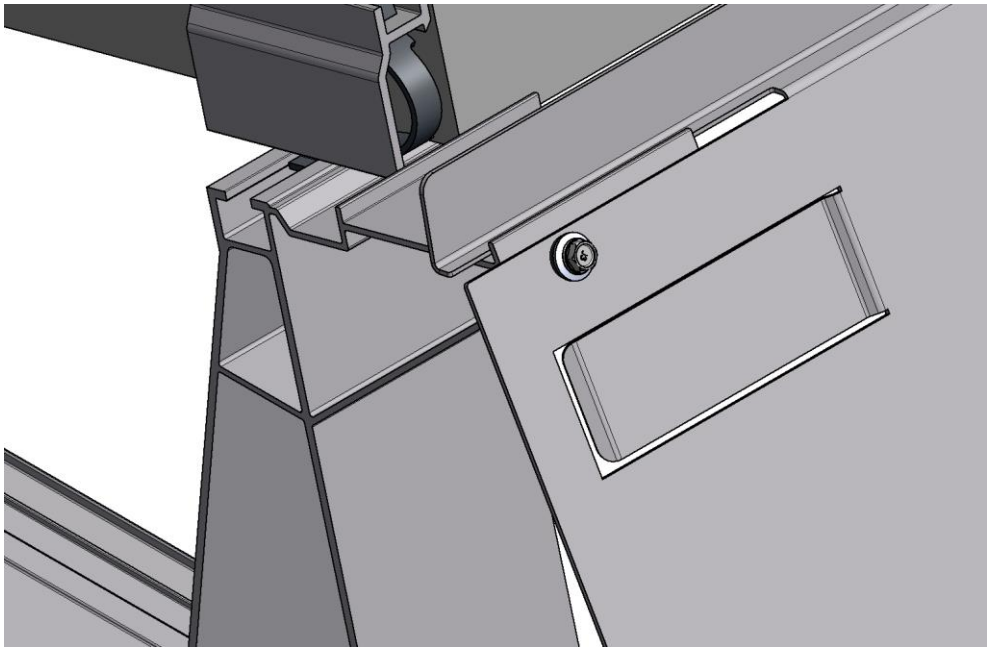

Fig. 63 Fixation wind plate

8.8 Cable clip assembly

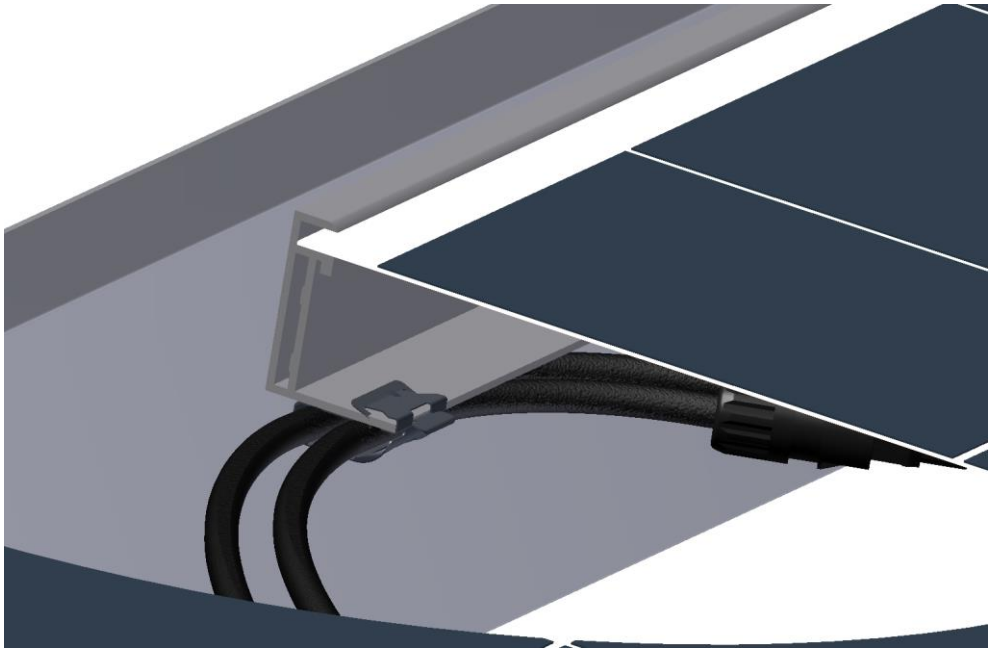

Fig. 64 assembly cable clip 0°

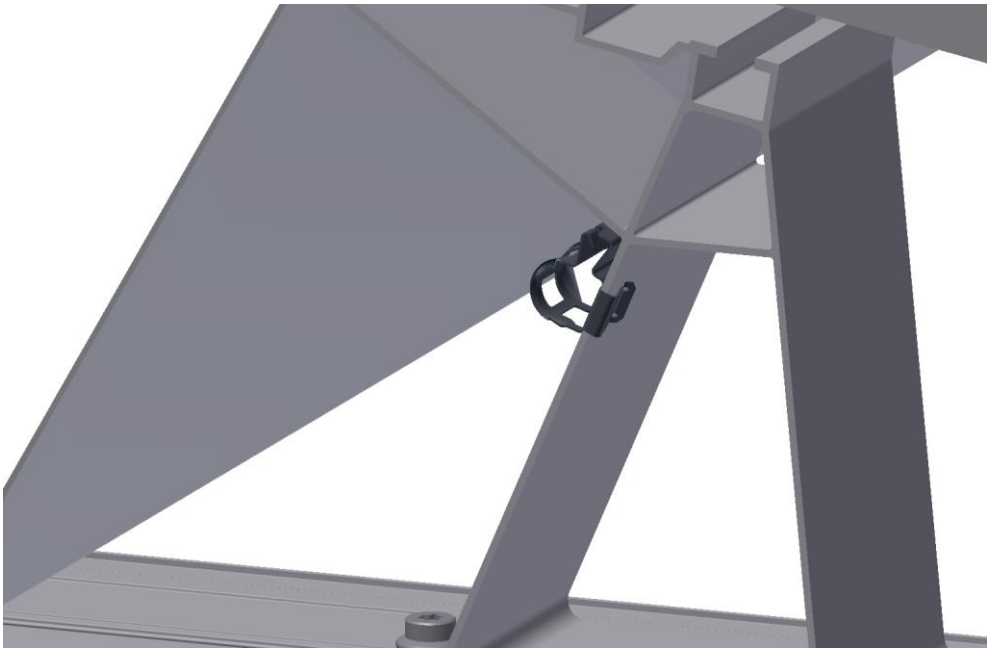

Fig. 65 assembly cable clip 90°

9. System installation AeroFlat

Before constructing the PV system the roof must be cleared of dirt, snow and ice.

9.1 Base rail

Install base rails with integrated building protection mat

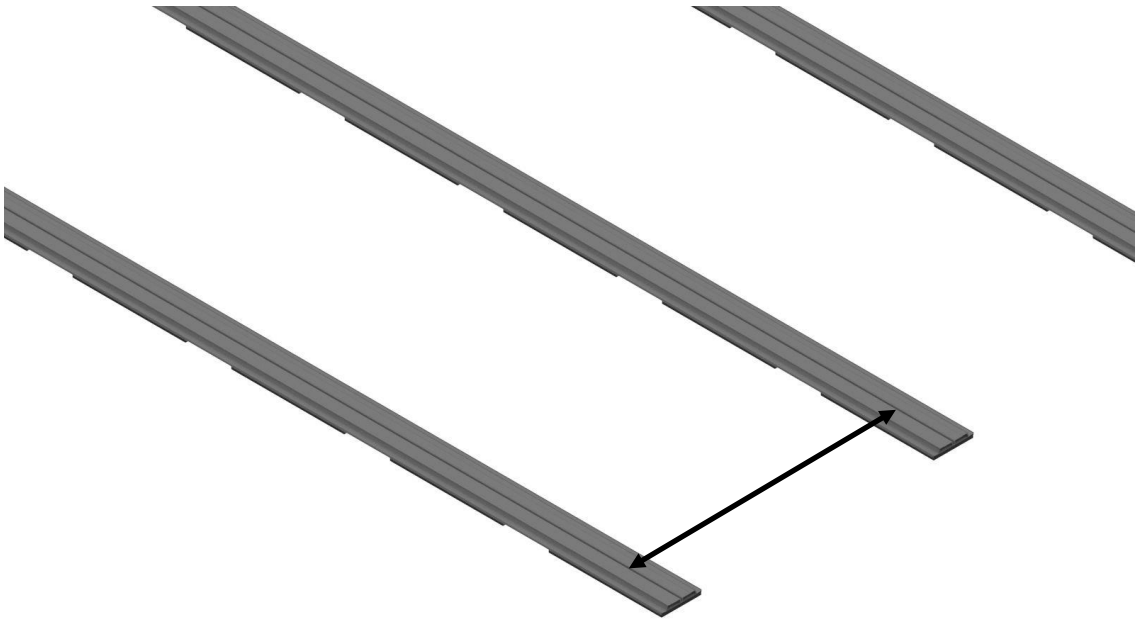

Fig. 66 Base rail installation

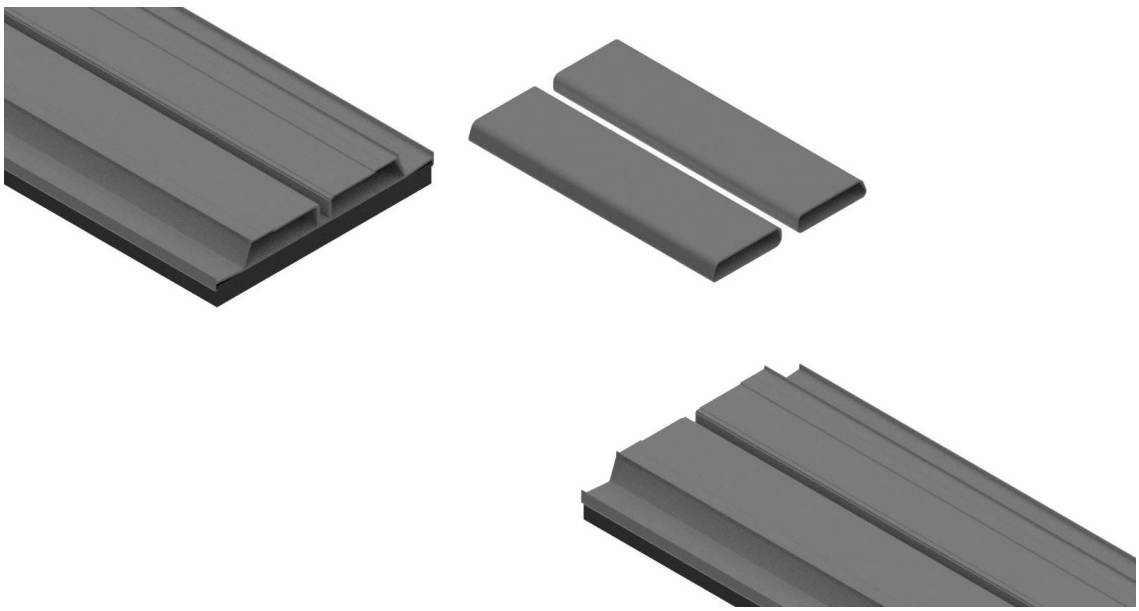

Fig. 67 Insert base rail connectors up to half-way into the base rail

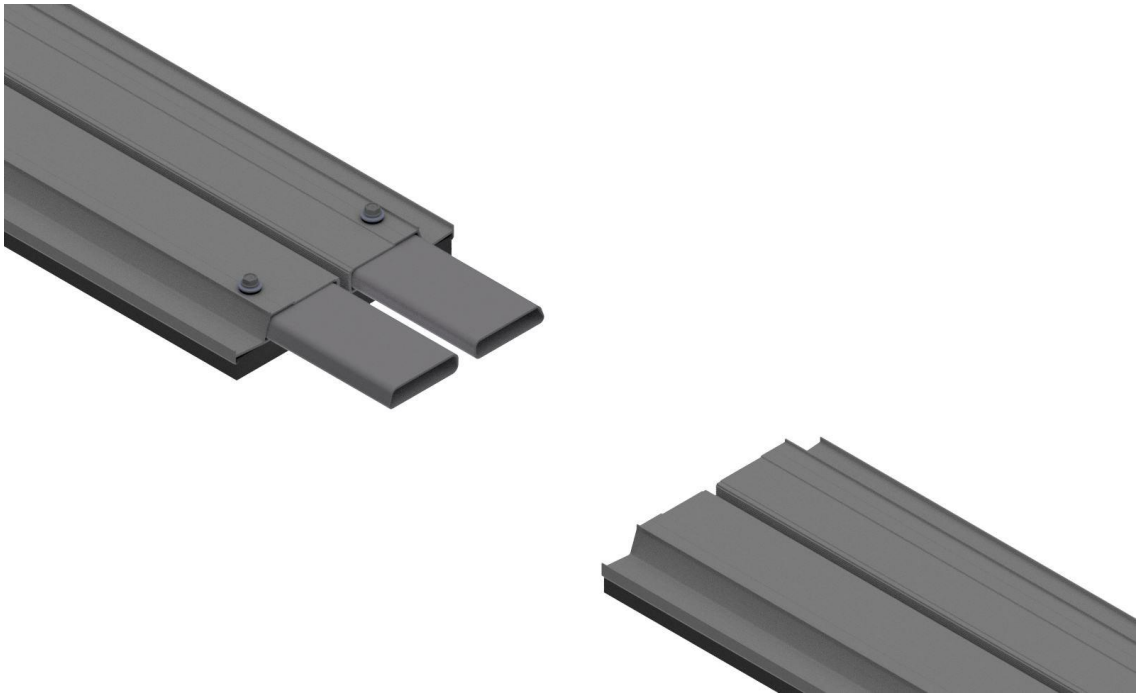

Fig. 68 Secure each base rail connector with a sheet-metal screw



Fig. 69 Join the base rails together and screw in 2 more sheet-metal screws

9.2 Support rail

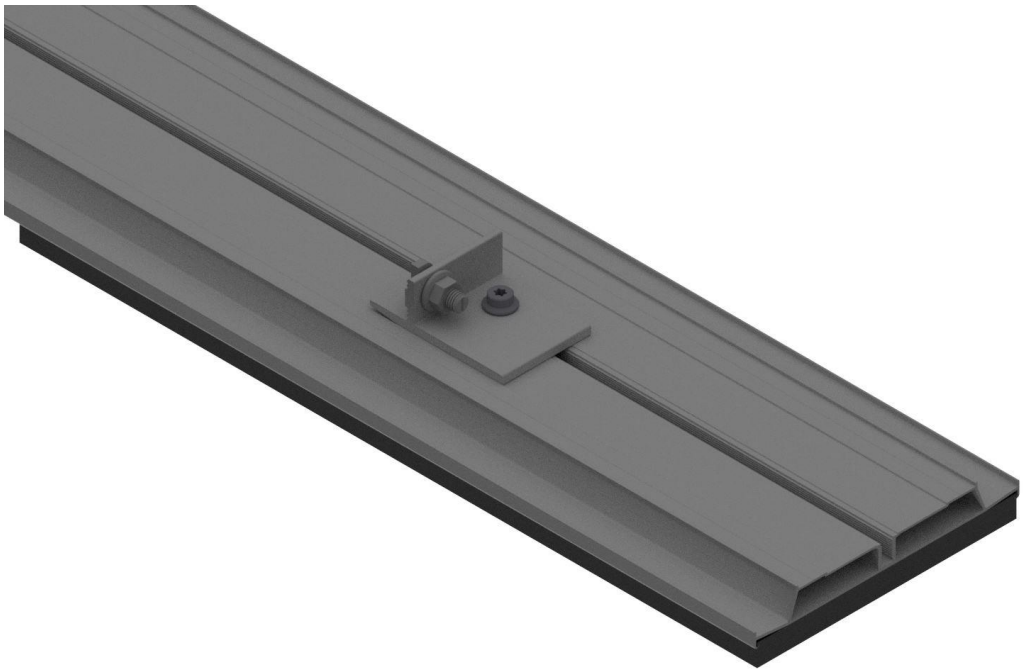

Fig. 70 Fix universal connector AeroFlat with M8x20 socket cap screw

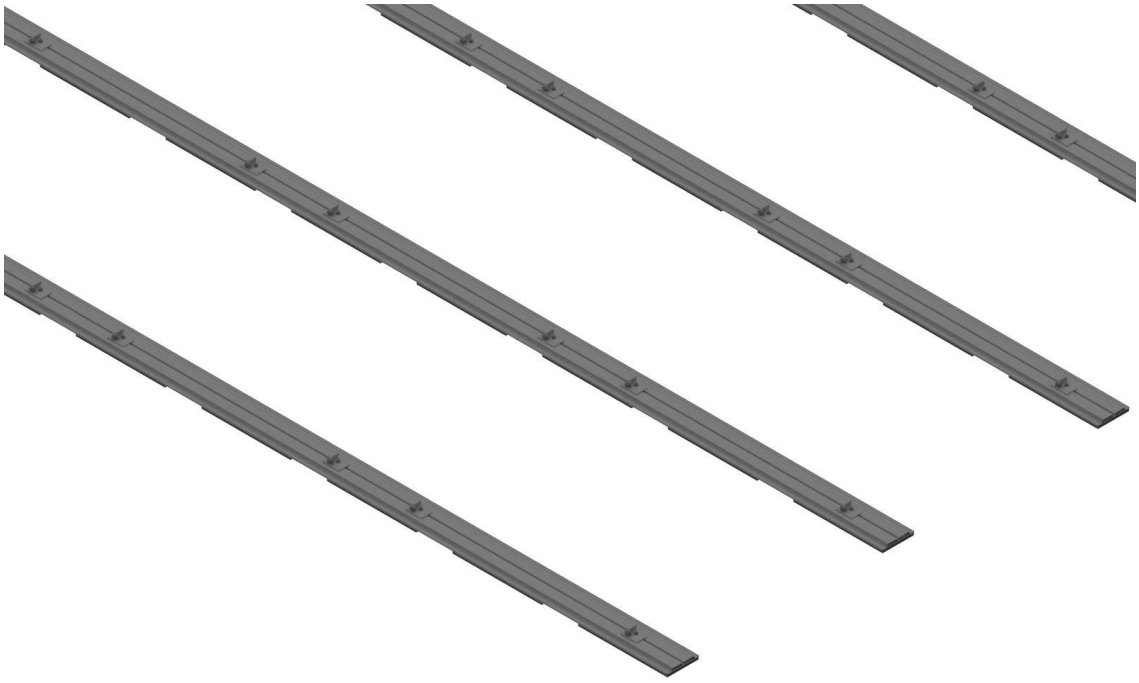

Fig. 71 Mounted universal connectors AeroFlat



Fig. 72 Support rail TF60 mounted at universal connector

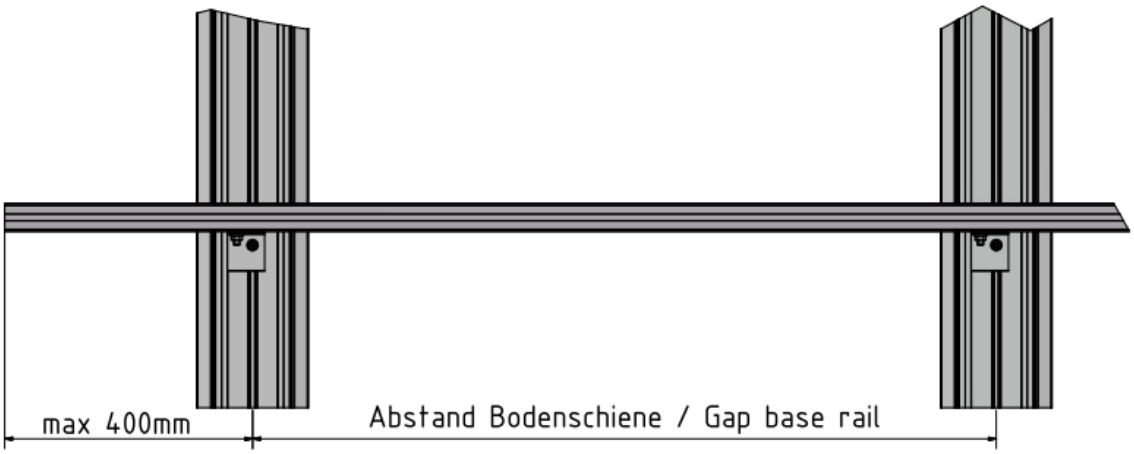

Fig. 73 Maximum allowable overhang

Important information:

The support rail overhang of the TF60 profile must not exceed 400 mm.



Fig. 74 Insert butt connector

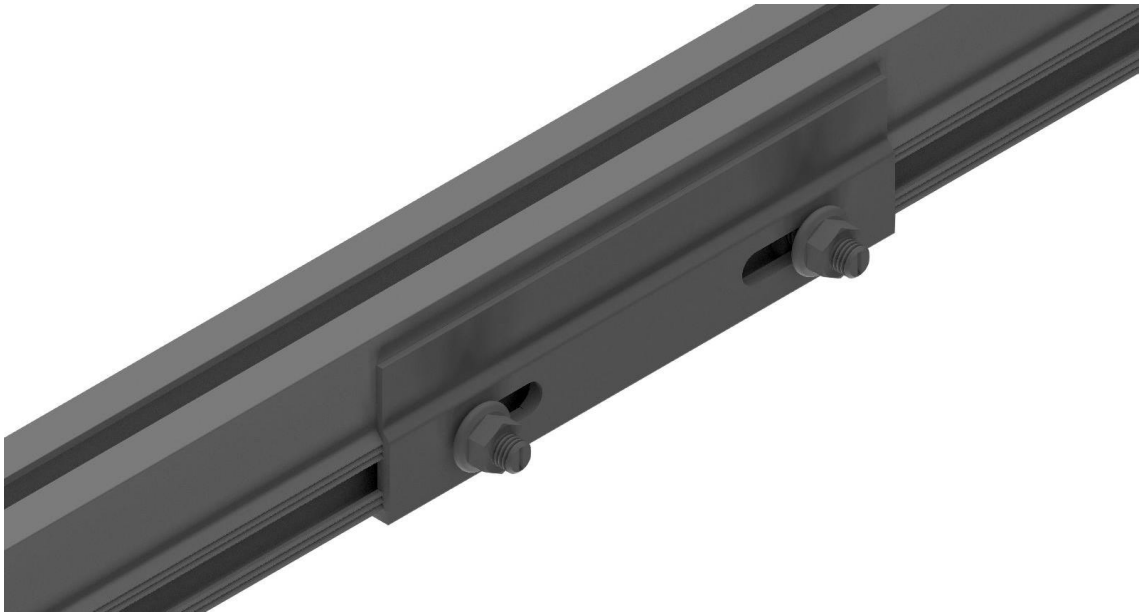

Fig. 75 Mounted butt connector

Important information:

Ensure that all T-head screws and hammer nuts have engaged with the rail so they are completely inserted.

The support rail pieces must be fastened to at least two support points before a butt connector may be installed. Not more than one butt connector may be installed within two support points.

9.3 Ballast

Important information:
We recommend that you use stones with the following measurements (w x l x h):

Stone 30 x 30 x 4 cm

Stone 40 x 40 x 4 cm

Stone 50 x 50 x 5 cm

Stone 60 x 40 x 5 cm

The ballast should always be placed under the module. The max. ballasting potential on the base rail is and corresponds, in the above-mentioned blocks, 56 kg for the AeroFlat.

Important information:
It must be ensured by the customer that the ballast does not slip over the life time of the system and is sufficiently fixed at the mounting system.

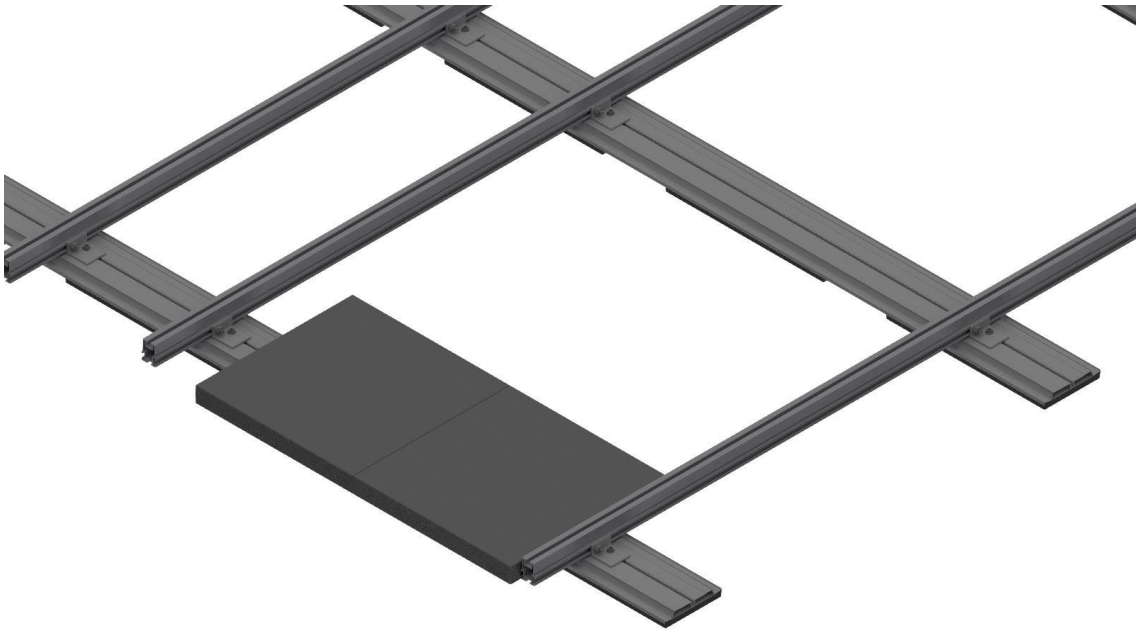

Fig. 76 Ballast on the base rail

Important information:
When using alternative ballast rails and alternative ballast materials the adequate corrosion protection and frost resistance of materials is to ensure!

If the system has to be loaded with more than 56 kg on the base rail, the ballast is placed on L-angles between the base rails.

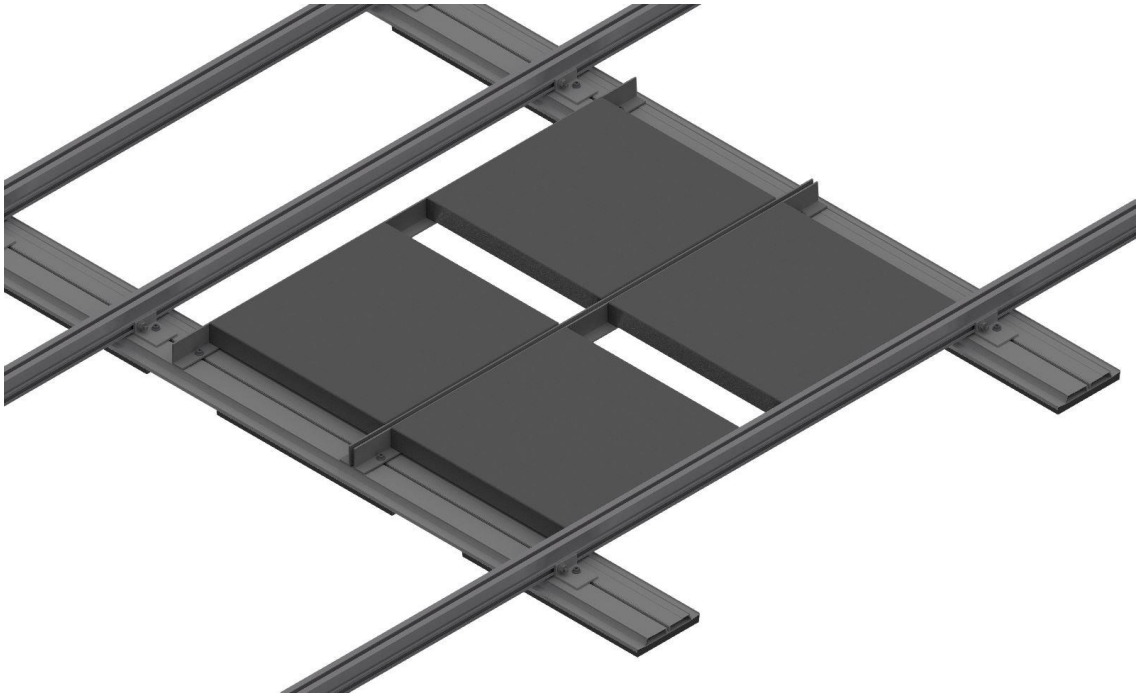

Fig. 77 Ballast between base rails

The ballast on the L-angles should always be from the outside to the inside.

9.4 Module assembly

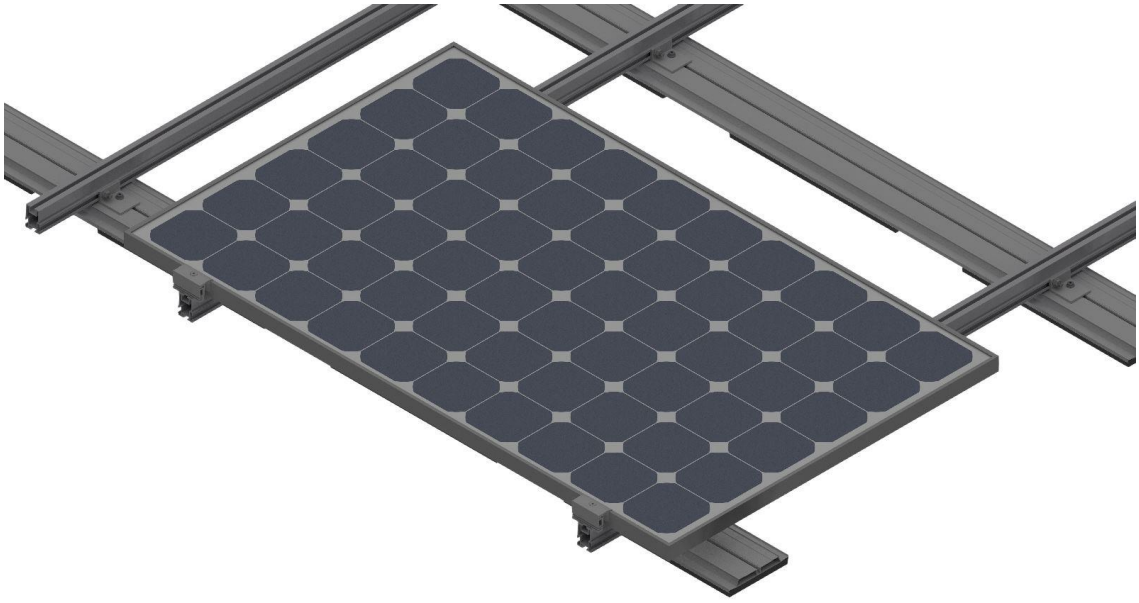

Fig. 78 Place the module on the base rail and fasten with clamps

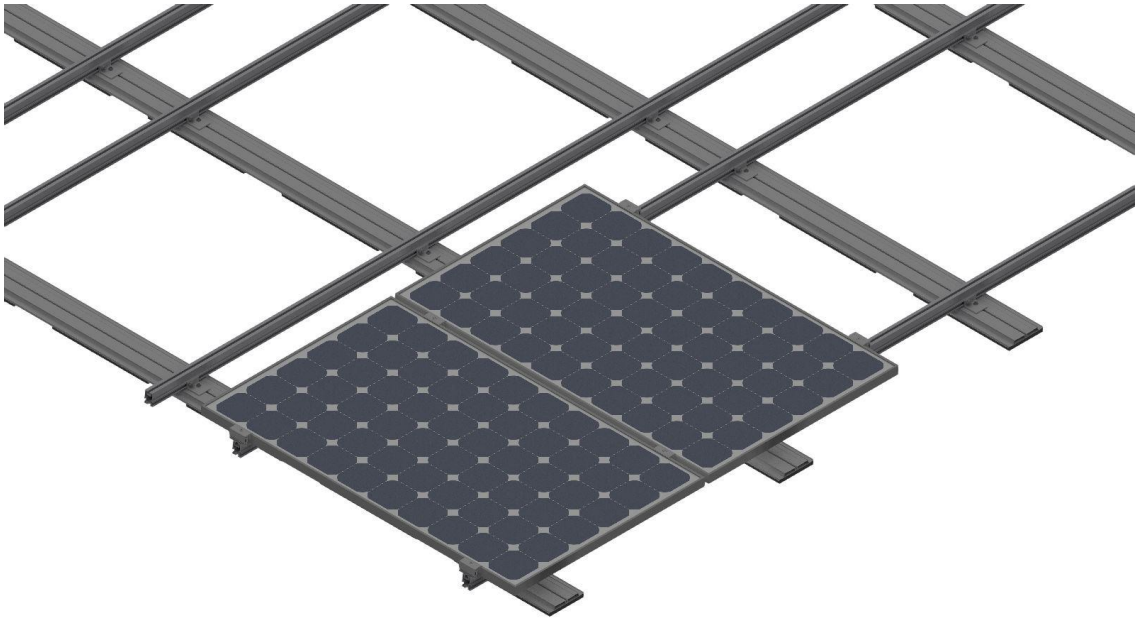

Fig. 79 Place the second module next to it and fix ist with clamps

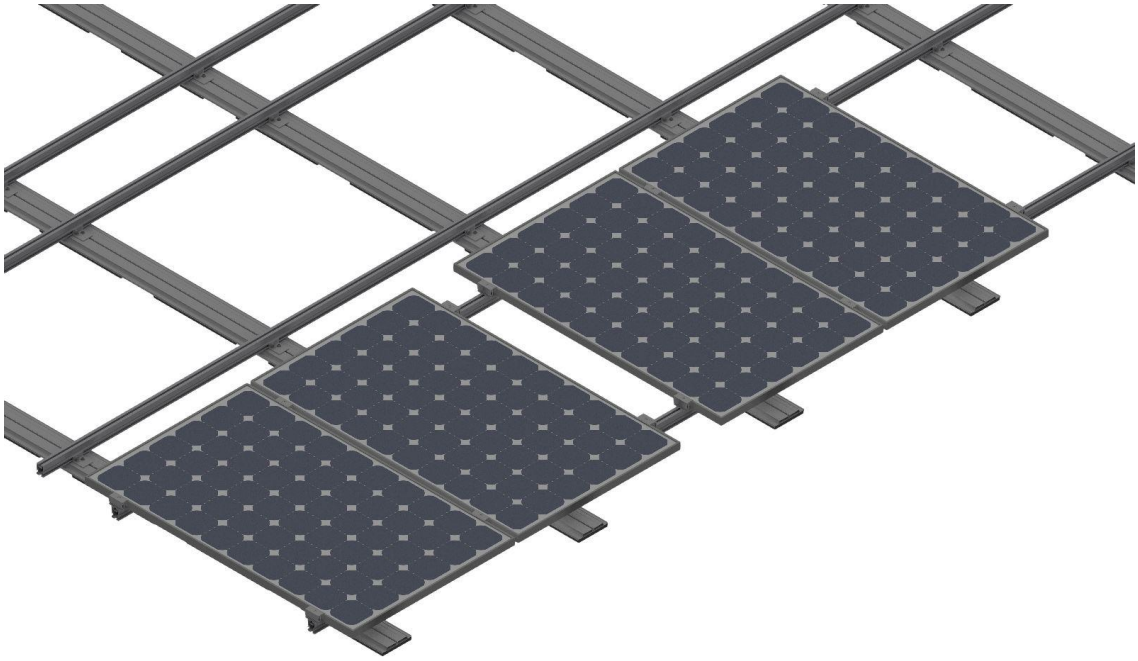

Fig. 80 After two modules keep a distance of 250 mm

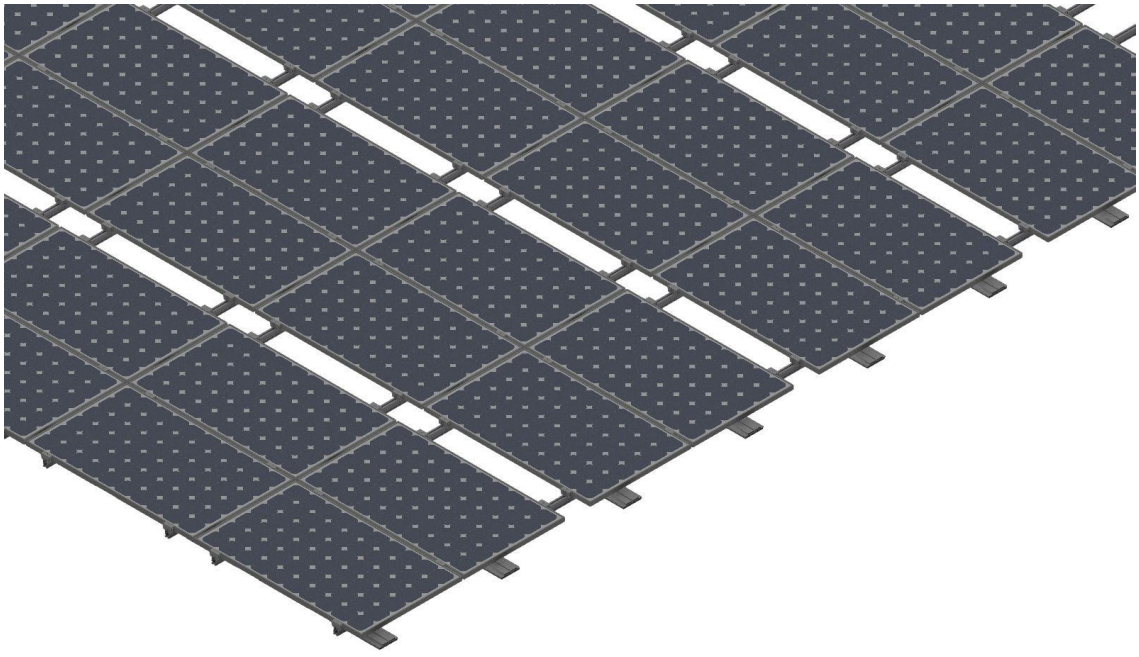

Fig. 81 Mounted module field

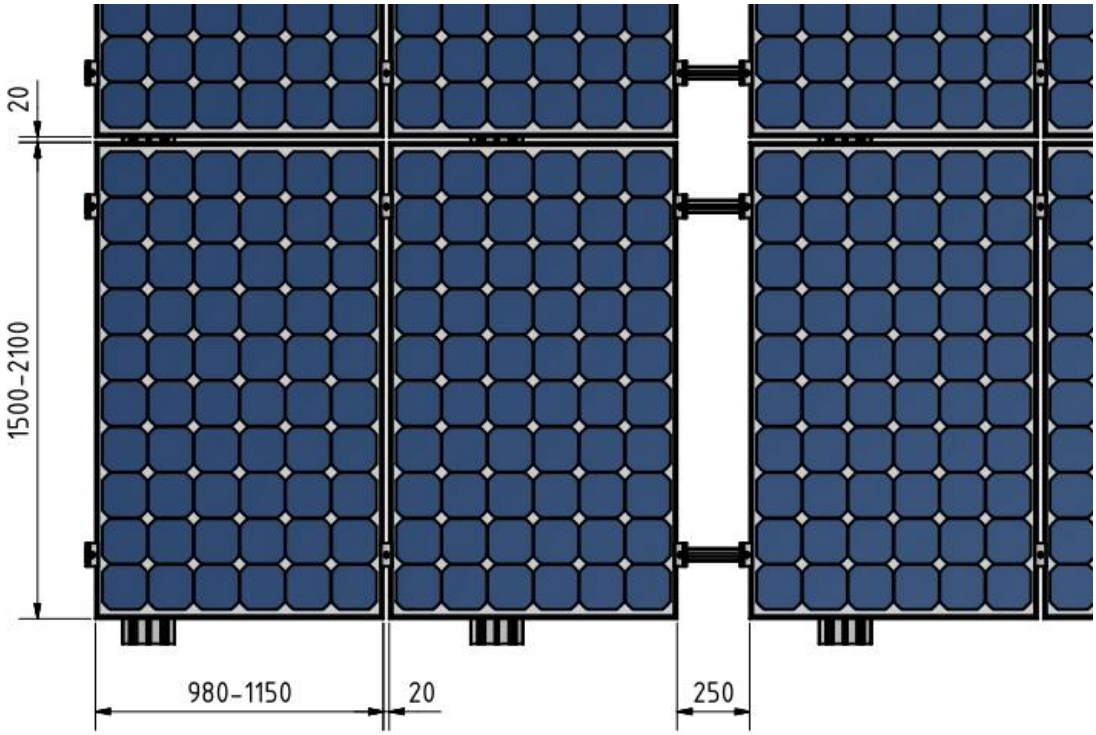

Fig. 82 Schematic system dimensions

The middle and outer clamp are delivered pre-assembled. The middle clamp G3 covers a clamping area of 30-50 mm. However the outer clamp G3 must be ordered for each module height.	 G3 Middle and outside clamp
The middle clamp G5 covers a clamping area of 30-40 mm. The EC adapter G2 is installed with the middle clamp G5 and Secure clip for EC adapter / cable guide and replaces the traditional outer clamp..	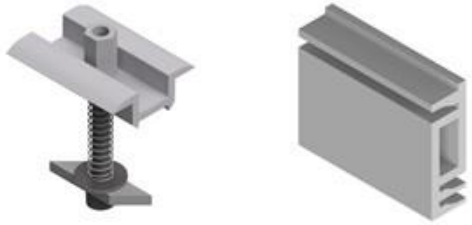 G5 middle clamp and EC adapter G2

Important information:

Depending on the height of the module frame, a different version of the outer clamp G3 will be required.

The EC adapter G2 for G5 middle clamp covers only the frame sizes 30, 32, 35, 38 und 40 mm.

Important information:

- The tightening torque of the G3 clamps is 15 Nm!
- The tightening torque of the G5 clamps is 10 Nm!

Do not use a ratchet or a wrench with high leverage as the maximum tightening torque could easily be exceeded.

Please only use a Torx screwdriver with T-handle or cordless screwdrivers with the appropriate torque settings.

The middle and outer clamps G3 can be inserted into the supports directly from above where required.

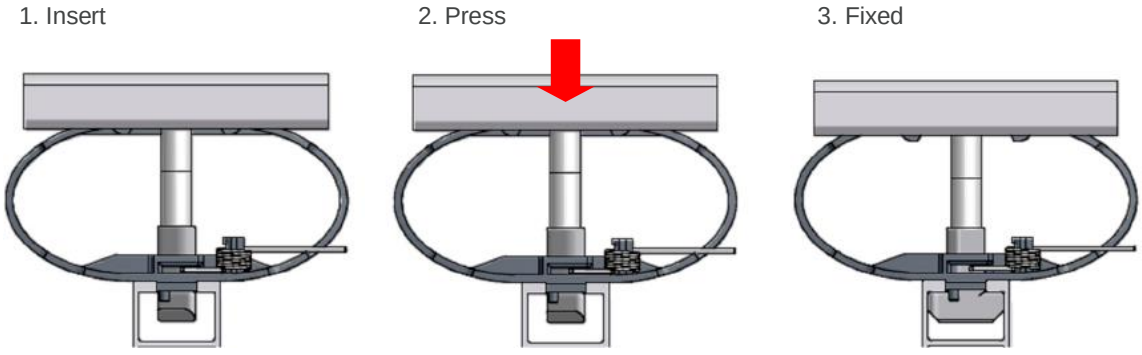

Fig. 83: Inserting the middle clamp G3

The middle clamps G5 can be inserted into the supports directly from above where required.

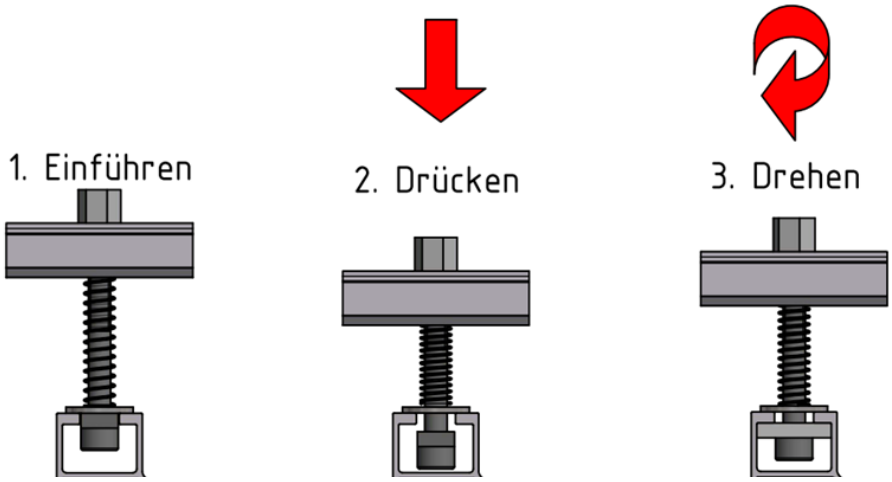

Fig. 84 Inserting the middle clamp G5

The adaptor EC is clamped by the given frame height with the middle clamp G4 and substitutes thus the end clamp. Secure clip for EC adapter / cable guide fixes the AK adapter to the middle clamp G5.

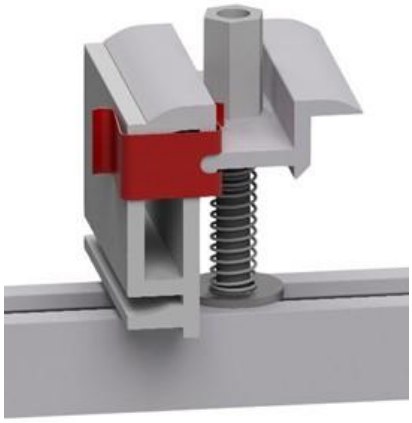

Fig. 85 EC adapter with middle clamp G5 and secure clip

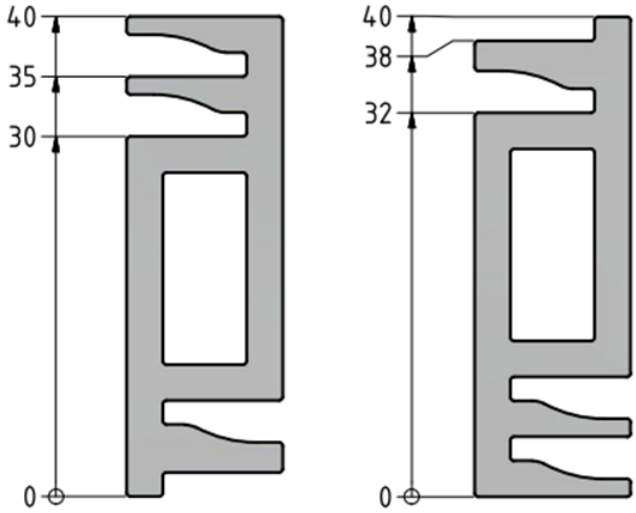

Fig. 86 EC adapter G2 frame hights

10. System security device

For a roof inclination > 3° it is an additional system security device in the direction of the roof pitch necessary. For a roof inclination ≤ 3° it is an additional system security device recommended. With the anti-slip safety device, the module arrays are connected to each other via the ridge. Alternatively, the anti-slip syftey device can be attached at the building. The fastening to the building must be planned and statically tested by the customer. The anti-slip safety device is then attached every second to fourth row. Damage to the roof cladding from the anti-slip safety device can be prevented in the long-term through suitable measures by the customer.

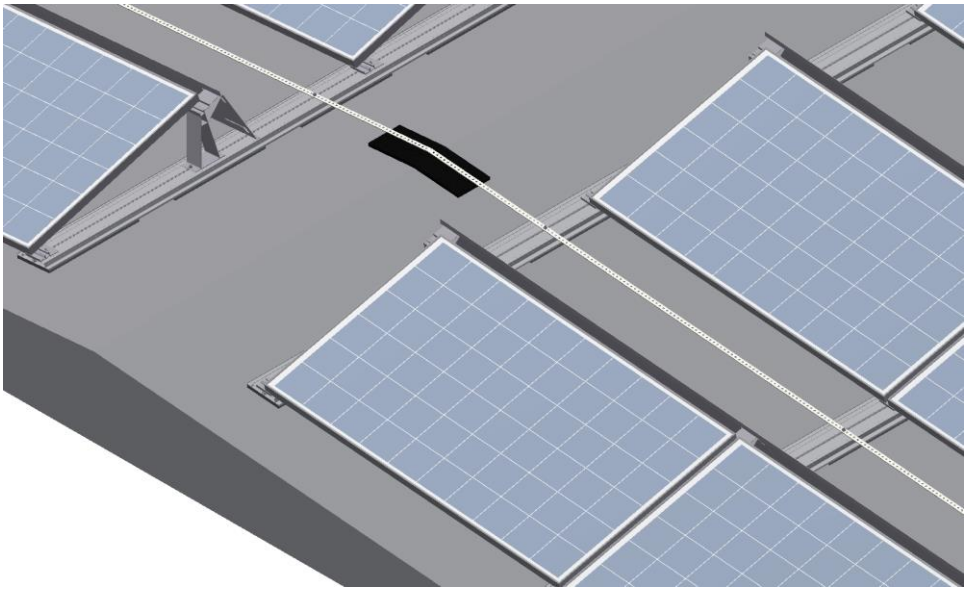

Fig. 87 Cross-mounted anti-slip safety device AeroFix

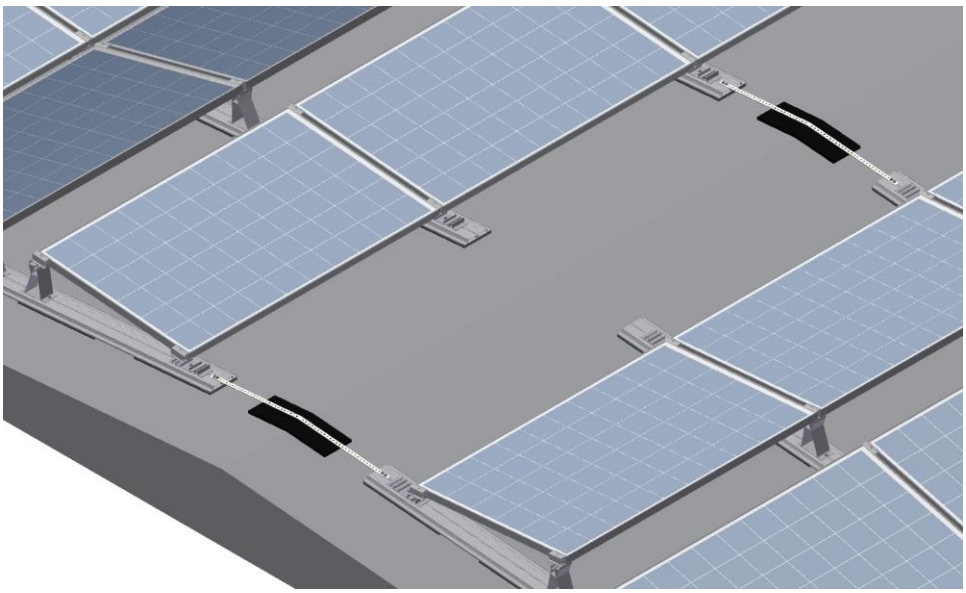

Fig. 88 Longitudinally mounted anti-slip saftey device AeroFix

Mounting the anti-slip safety device. The perforated tape links the ground rails over the ridge.

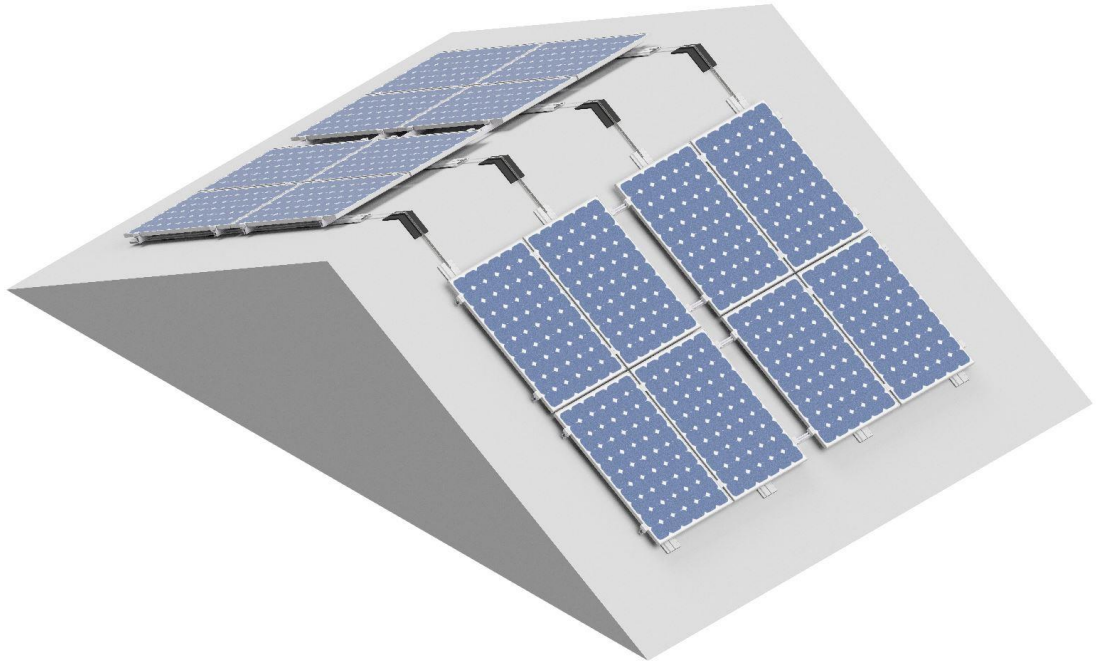

Fig. 89 AeroFlat anti-slip saftey device

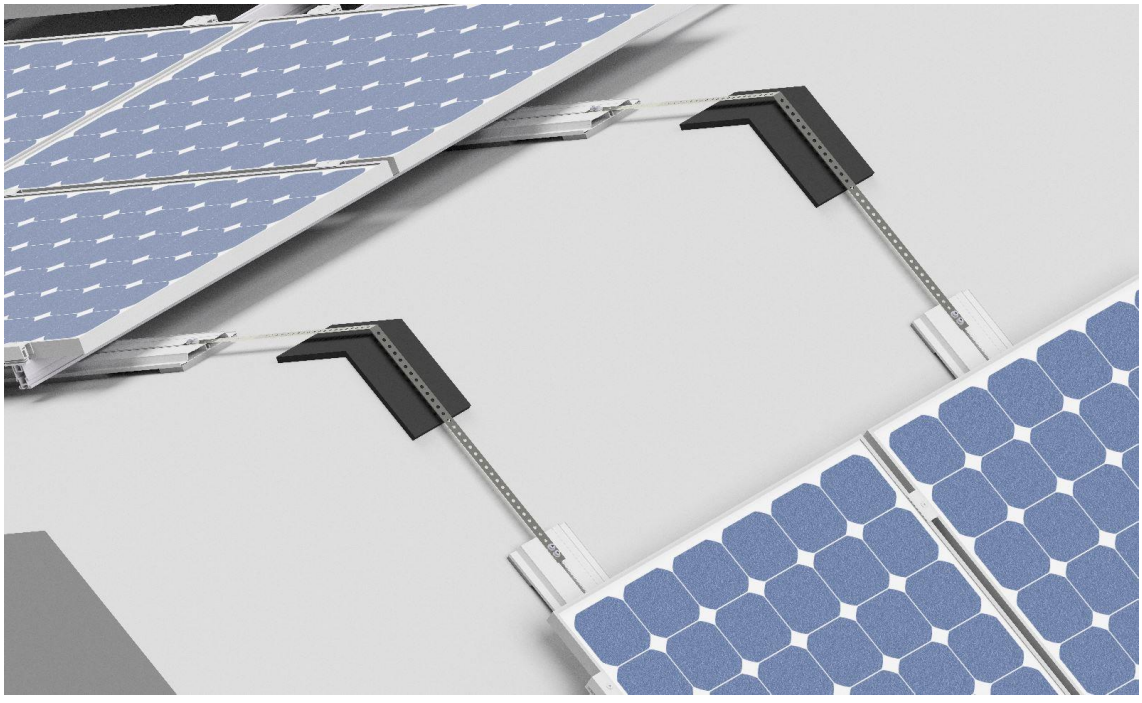

Fig. 90 Longitudinally mounted anti-slip saftey device AeroFlat

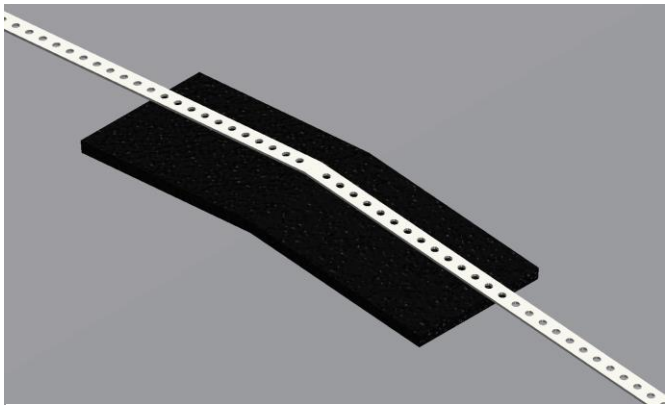

Placement of the anti-slip device over the ridge. The roof cladding must be protected from any damage.

Fig. 91: Ridge placement

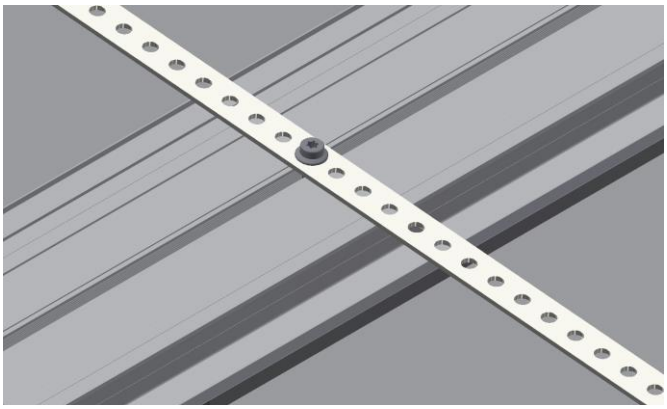

The perforated tape is connected to the base rail with a M8x16 socket head screw.

Fig. 92: Base rail anti-slip security device cross connection

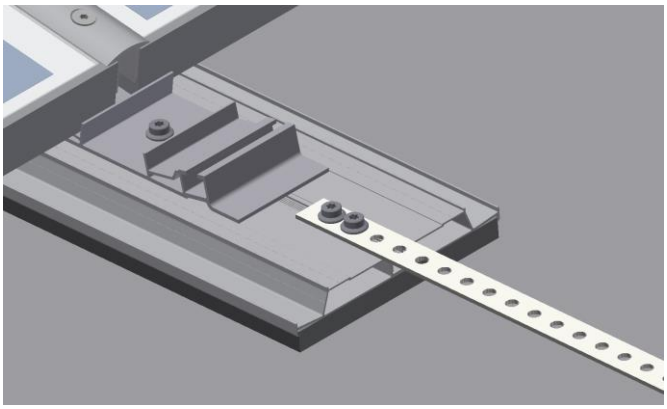

The perforated tape is connected to the base rail with at least two M8x16 socket head screws.

Fig. 93 Ground rail anti-slip security device longitudinal connection

Important information:

Additional safety measures may be required for larger roof pitches and/or loads.

11. Final inspection

After completing the PV system inspect the screw and clamp connections. Check the entire structure for strength and stability and check the roof cladding for damage.

It is advisable to document the completed system.

12. Parts list

Image	Product no.	Description
AeroFix 10 / 15 AeroFlat		
		**Base rail with integrated building protection mat**
	6101100060	**Base Rail G2, 800mm**
	6101100061	**Base Rail G2, 1500mm**
	6101100062	**Base Rail G2, 2200mm**
	6101100063	**Base Rail G2, 3100mm**
	6101100064	**Base Rail G2, 4200mm**
	6101100065	**Base Rail G2, 5400mm**
		**Base rail with integrated building protection mat foil-laminated (ak)**
	6101100066	**Base Rail ak G2, 800mm**
	6101100067	**Base Rail ak G2, 1500mm**
	6101100068	**Base Rail ak G2, 2200mm**
	6101100069	**Base Rail ak G2, 3100mm**
	6101100070	**Base Rail ak G2, 4300mm**
	6101100071	**Base Rail ak G2, 5400mm**
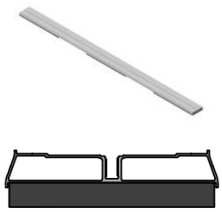		**Base rail with integrated building protection mat**
	6101100072	**Base Rail G2 Eco, 2200mm**
	6101100074	**Base Rail G2 Eco, 5400mm**
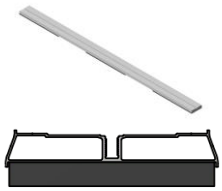		**Base rail with integrated building protection mat foil-laminated (ak)**
	6101100073	**Base Rail ak G2 Eco, 2200mm**
	6101100075	**Base Rail ak G2 Eco, 5400mm**

Image	Product no.	Description
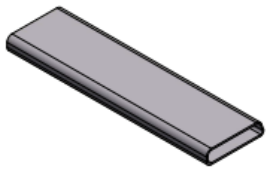	6101100041	**Base rail connector**
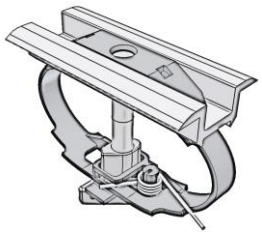		**Middle clamp G3**
	6700400125	**Middle clamp G3 30-50 mm**
	6700400126	**Middle Clamp G3 30-50mm black**
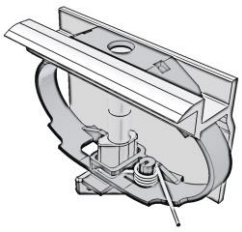		**IBC TopFix 200 outside clamp G3**
	6700400170	**End clamp G3 30 mm**
	6700400171	**End clamp G3 30 mm black**
	6700400127	**End clamp G3 31 mm**
	6700400128	**End clamp G3 31 mm black**
	6700400165	**End clamp G3 32mm**
	6700400166	**End clamp G3 32mm black**
	6700400129	**End clamp G3 33 mm**
	6700400169	**End clamp G3 33 mm black**
	6700400130	**End clamp G3 35mm**
	6700400131	**End clamp G3 35 mm black**
	6700400132	**End clamp G3 38 mm**
	6700400133	**End clamp G3 38 mm black**
	6700400134	**End clamp G3 40 mm**
	6700400135	**End clamp G3 40 mm black**
	6700400136	**End clamp G3 42 mm**
	6700400137	**End clamp G3 42 mm black**
	6700400138	**End clamp G3 45 mm**
	6700400139	**End clamp G3 45 mm black**
	6700400140	**End clamp G3 46 mm**
	6700400141	**End clamp G3 46mm black**
	6700400142	**End clamp G3 50 mm**
	6700400143	**End clamp G3 50 mm black**

Image	Product no.	Description
	6700400172	**Middle Clamp G5 30-40mm**
	6700400173	**Middle Clamp G5 30-40mm black**
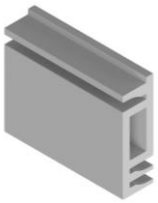	6700400161	**EC Adapter G2 30-40mm**
	6700400162	**EC Adapter G2 30-40mm black**
	6700300067	**Secure clip for EC adapter / cable guide**
	6900600010	**Self-drilling-screw 4.8x19 – SW8**
	6900100012	**Socket Cap Screw M8x16 A2 TX40** with lock toothing, AeroFix
AeroFlat		
	6900100013	**Socket Cap Screw M8x16 A2** with lock toothing, AeroFlat
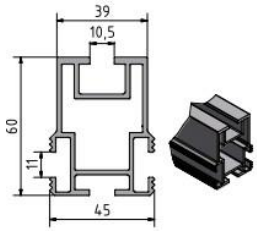	6800100051	**Support Rail TF60, 5500mm**
	6800100052	**Support Rail TF60, 2250mm**

Image	Product no.	Description
	6700300045	**Rail end cap** for TF60
	6700300044	**Butt connector TF60** Including 2x M10x25 A2 T-head screws 2x DIN 6923 M10 A4 locking nuts
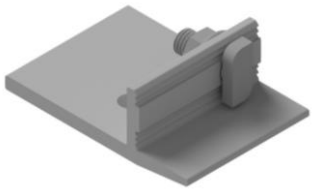	6101100057	**Universal connector AeroFlat** Including 1x M10x35 A2 T-head screw 1x M10 A4 locking nut -> completely pre-assembled
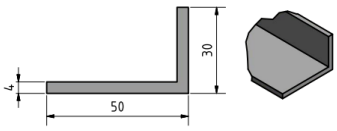	6802100009	**Alu-L-profile 50x30x4, 6000mm**
	6802100010	**Alu-L-profile 50x30x41860mm**
AeroFix 10 / 15		
	6101100022	Ballast rail
AeroFix 10-S		
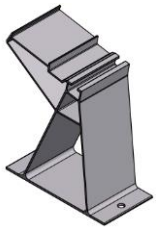	6101100042	**Support top** Also used in AeroFix 10-EW with wind plate beginning and ending.

Image	Product no.	Description
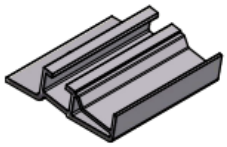	6101100043	**Support bottom** Also used in AeroFix 10-EW with module beginning and ending.
	6101100016	**Wind plate** Also used in AeroFix 10-EW with wind plate beginning and ending.
AeroFix 10-EW		
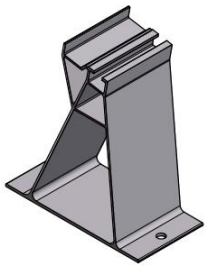	6101100044	**Support top** Without windplate mounting
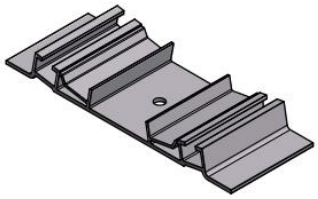	6101100045	**Support bottom**
AeroFix 15-S		
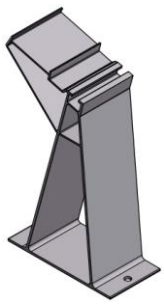	6101100046	**Support top**

Image	Product no.	Description
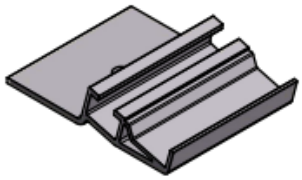	6101100047	**Support bottom**
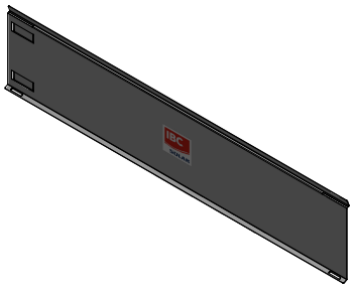	6101100019	**Wind plate**
Optional		
	6101100058	**Building protection mat** 500x172x15 mm
	6101100059	**Building protection mat (ak), foil-laminated** 500x172x15 mm
	6101100076	**Building protection mat Eco** 500x129x15 mm
	6101100077	**Building protection mat (ak) Eco, foil-laminated** 500x129x15 mm
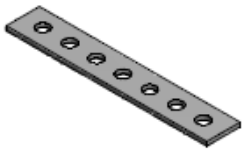	6101100025	**Slide protection** Coil 10 m - 25 mm width - Ø 9 mm
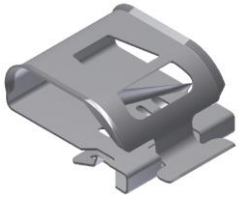	6101100027	**Cable clip 0°**

Image	Product no.	Description
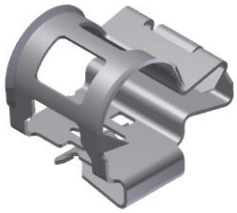	6101100028	**Cable clip 90°**
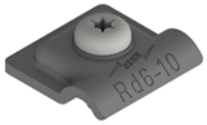	6700200039	**Clamp for equipotential bonding**
	6101100023	**Assembling jig** for - ground rail distance - support distance
	6101100024	**Static friction measuring device** to determine the static friction coefficients incl.: - case - dynamometer
	6101100048	**Snow load rail long G2** incl.: – 2 clip
	6101100049	**Snow load rail short G2** incl.: – 1 clip

Tab. 6 Parts list, for illustration only

13. Appendix

13.1. Information about IBC AeroFix

Tightening torques of screw connections
The tightening torques of the screw connections used in the IBC AeroFix / AeroFlat flat roof system should be dimensioned in accordance with DIN ISO 3506. Due to the difficulty in determining the friction coefficients in the external area, dimensioning in accordance with DIN ISO 3506 can prove difficult. We therefore recommend the following tightening torques:

Screw connection	Tightening torque
M6 (other)	10 Nm
M8 (module clamp)	15 Nm
M8 (other)	10 Nm
M10	30 Nm

Tab. 7: Tightenning torques

13.2. Maintenance instructions

In addition to the electrical inspections prescribed for the entire PV system, it must be carried out an annual and event-dependent (heavy storm, hail etc.) inspections of the mounting system into account the points of the maintenance log.

In the maintenance log, "not ok" points must be repaired to avoid further damage.

Mechanical connections, e.g. the module clamps must be checked for firm seating and tightening torque and tightened if necessary. Building protection mats can slip and have to be brought back into position.

Disassemly of the mounting system is carried out in the reverse order of assemly steps.

If it becomes necessary to clean the modules, this must be done without chemical cleaning products and using only clear water.

The modules can easily be replaced by removing the module cabling and releasing the corresponding module clamps. Please observe the relevant safety requirements when doing this.

Smart Systems for Solar Power

IBC SOLAR

Maintenance log ☐ TopFix 200 ☐ AeroFix ☐ AeroFlat

Commission: ……

Place: ……

Ok	**not Ok.**	
☐	☐	The system is in a visually perfect condition and according to the installation plan in the correct position
☐	☐	Mounting system tested for stability and corrosion
☐	☐	No damage to the roof by the PV system
☐	☐	Mechanical connections for tight fit and tightening torque tested according the installation manual

Zusätzlich nur bei AeroFix

☐	☐	Building protection mats are in the correct position
☐	☐	Ballast is in the correct position (on the base rail or ballast rail)
☐	☐	Ballast is visually fine (no cracks, breaks etc.)
☐	☐	Unhindered water drainage

Comments

……
……
……
……
……

Maintenance was carried out by

Company:……

Person:……

The maintenance work must be carried out by a technical company that has experience with electrical systems and works with the mounting systems.

The completed maintenance log must be handed over in copy to the plant operator.

I confirm the correctness and execution of the maintenance

Place, date ……

Signature ……
Need of the written form of an authorized person!

Printed Name ……

13.3. IBC Aerofix / AeroFlat Stiction Log

IBC AeroFix / AeroFlat flat-roof system

Test record

Determination of stiction coefficients

CUSTOMER INFORMATION

Name		Phone	
Company		Mobile	
Street / No.		Fax	
Post code/city		E-mail	

CONSTRUCTION PROJECT

Customer name		Phone	
Street / No.		Mobile	
Post code/city		Fax	
Com.:		E-mail	

TEST PROCEDURE

The tests are to be performed in accordance with the October 2004 edition of DIN EN ISO 8295, Plastics - Films and sheeting - Determining coefficients of friction.
A total of 10 tests are to be carried out: five dry, five wet. The tests are to be distributed evenly across the roof surface.
Visually dissimilar roof areas are to be tested separately from one another. The tests are to be repeated accordingly.
Before testing begins, the roof membrane areas where measurements are being taken should be cleaned.

The test specimen (10 kg on IBC stiction gauge) is placed onto the roof membrane with the appropriate protective matting. After the defined waiting period (around 30 seconds) has elapsed, parallel force is applied centrally to the test specimen using the tension spring, and then measured using the spring scale. It is important that the force be applied evenly. The maximum force that can be applied before the test specimen begins to move indicates the coefficient of friction.

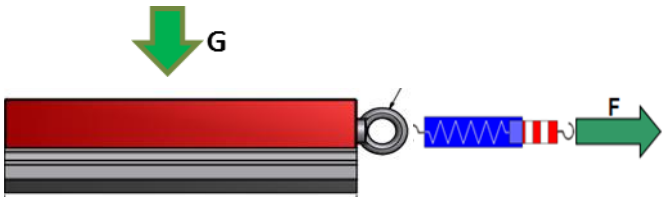

Static friction coefficient μ = F/G

Sketch of roof structure (from top to bottom)

Date: _____

Time: _____

Temperature: _____

Test No.	Dry			Wet		
	Test specimen weight	Measured force	μ	Test specimen weight	Measured force	μ
	G (kg)	F (kg)	F / G	G (kg)	F (kg)	F / G
1						
2						
3						
4						
5						

Evaluation (based on lowest measured value) **μ =**

Appendix: Roof layout plan with measuring point locations / test procedures

Signature person in charge _____

13.4. Checklist IBC AeroFix

Checkliste AeroFix/AeroFlat Checklist AeroFix/AeroFlat

☐ AeroFix 15-S ☐ AeroFix 10-S ☐ AeroFix 10-EW ☐ AeroFlat

Bitte füllen Sie dieses Formular vollständig aus, um eine schnelle Bearbeitung Ihrer Anfrage zu gewährleisten.
Please fill in this questionnaire completely to guarantee a quick processing of your request.

KUNDENINFORMATIONEN (Installateur) / OWNER INFORMATION (Installer)

Name: / Name: _____
Telefon: / Telephone: _____
Firma: / Company: _____
Mobil: / Cell Phone: _____
Straße / Nr.: / Street address: _____
Fax: / Fax: _____
PLZ / Stadt: / ZIP code/city: _____
E-mail: / E-mail: _____
Ansprechpartner: / Contact person: _____
Kom.: / Com.: _____

STANDORTINFORMATIONEN (PV-Anlage) / SITE INFORMATION

PLZ / Stadt: / ZIP code/city: _____
Straße / Nr.: / Street address: _____
Land / country: _____
Windlastzone nach EN 1991-1-4 / Wind load zone according to EN 1991-1-4: _____
Schneelastzone nach EN 1991-1-3 / Snow load zone according to EN 1991-1-3: _____
Höhe über N.N. / Height above sea level: _____ m

Wichtig! Zusätzlich mögliche Auflast laut Gebäudestatik (Lastreserve):
Important! Possible additional load in accordance with building statics (load Reserve): _____ kg/m²

UMGEBUNG DES STANDORTS (PV-Anlage) / SITE SURROUNDINGS (PV system)

Geländekategorie / Terrain category

☐ Geländekategorie I / Terrain category I
Offene See, Küstennahes Gebiet
Open sea, lake with at least 5 km open area



☐ Geländekategorie II / Terrain category II
Offenes Gelände mit vereinzelten Hindernissen
Open terrain with isolated obstacles



☐ Geländekategorie III / Terrain category III
Dörfer, vorstädtische Bebauung, Waldgebiete
Village, suburban, woodland



☐ Geländekategorie IV / Terrain category IV
Stadt
Urban



IBC SOLAR AG • Am Hochgericht 10 • 96231 Bad Staffelstein/Germany • Tel.: +49 (0)9573-92 24 0 • Fax: +49 (0)9573-92 24 111
E-Mail: info@ibc-solar.de • www.ibc-solar.de

Stand/Last update: 06.2019
Seite/Page 1 von/of 2

Checkliste AeroFix/AeroFlat Checklist AeroFix/AeroFlat

Achtung: Für jede Dachfläche ist eine eigene Checkliste (Seite 2) zu erstellen!
Attention: For every roof area is to create a separate checklist (page 2)

ANGABEN ZUM DACH / ROOF INFORMATION

Art der Konstruktion: Type of construction:
☐ Bestehendes Dach Existing roof ☐ Saniertes Dach Restored roof ☐ Neubau New building

Höhe Dachfläche Nr.: Height of roof: _____ m
Neigung des Dachs (AeroFix max. 10°, AeroFlat max. 30°): Slope of roof (AeroFix max. 10°, AeroFlat max. 30°): _____ Grad degrees

Gebäudemaße: Building dimensions: _____ m Länge length × _____ m Breite width
☐ Einseitneigung single pitch roof 

Alter des Dachs: Age of roof: _____ Jahre years
☐ Dachprofilneigung double pitch roof 

Attika vorhanden: Parapet existent: ☐ Ja Yes Höhe: Height: _____ m ☐ Nein No

ANGABEN ZUR DACHART / DETAILS OF ROOF TYPE

☐ Foliendach Membrane roof ☐ Bitumen Bitumen ☐ Beton Concrete

☐ zusätzliche Kiesauflage additional gravel covering
Hersteller (falls bekannt): Manufacturer (if known): _____

Haftreibungskoeffizient: Coefficient of static friction: _____
Sonstiges: Other: _____

MODULDATEN / MODULE DATA

Modulhersteller: Module manufacturer: _____
Modulmaße: Module dimensions: _____ mm
Leistung: Output: _____ Wp
Modulgewicht: Module weight: _____ kg
Anzahl der Module: Number of modules: _____

Standardsprungmaß (Vorderkante Modul – Vorderkante Modul) / Distance between bottom supports
Standardsprungmaß bei AeroFix 15-S = 1,8 m oder variabel (zwischen 1,62 m und 1,98 m):
Distance between bottom supports for AeroFix 15-S = 1.8 m or individual distance between bottom supports (from 1.62 to 1.98 m): _____ m
Standardsprungmaß bei AeroFix 10-S = 1,6 m oder variabel (zwischen 1,44 m und 1,76 m):
Distance between bottom supports for AeroFix 10-S = 1.6 m or individual distance between bottom supports (from 1.44 to 1.76 m): _____ m
Standardsprungmaß bei AeroFix 10-EW = 2,3 m (nicht variabel)
Distance between bottom supports for AeroFix 10-EW = 2.3 m (no individual distance possible)
AeroFlat 2 Module nebeneinander hochkant +270 mm (siehe Abbildung)
AeroFlat 2 modules side by side portrait +270 mm (see picture) 

ZWINGEND EINZUREICHEN / MUST BE SUBMITTED

☐ Zeichnung des Dachs (als AutoCAD oder PDF-Datei) mit Modulanordnung und Dachmaßen, First und Kehlen
Drawing of the roof (as AutoCAD or PDF file) with module arrangement and roof dimensions, ridge and coving

☐ Fotos von Dach, Standort und Umgebung (in alle Himmelsrichtungen), Luftbild (bitte einzeichnen, falls nicht verfügbar)
Photos of roof, location and environment (in all directions), Aerial view (please draw in if not available)

☐ Schnitt des Gebäudes Cross-section of building ☐ Moduldatenblatt Module data sheet ☐ Südrichtung vermerken Note southern direction

Sind Ablademöglichkeiten vorhanden (Stapler, Kran, etc)? Are unloading aids available (Fork-lift, crane etc.)? ☐ Ja Yes ☐ Nein No

Hiermit bestätige ich die Richtigkeit der Angaben / I herewith confirm the correctness of the statements.

..... Ort, Datum / Town, date
..... Unterschrift, Stempel / Signature, stamp

Achtung: Eine Bearbeitung der Anfrage kann nur nach Einreichung einer vollständigen und unterschriebenen Checkliste erfolgen. Nicht ausgefüllte Checklisten führen zu Verzögerungen der Planung. Attention: Editing of the request can be made only after submission of a complete and signed checklist. Not completed checklists lead to delays in planning.

IBC SOLAR AG • Am Hochgericht 10 • 96231 Bad Staffelstein/Germany • Tel.: +49 (0)9573-92 24 0 • Fax: +49 (0)9573-92 24 111
E-Mail: info@ibc-solar.de • www.ibc-solar.de

Stand/Last update: 06.2019
Seite/Page 2 von/of 2

14. Notes

IBC SOLAR AG
Am Hochgericht 10
96231 Bad Staffelstein
Phone +49 (0) 9573-92 24 0
Fax +49 (0) 9573-92 24 111
info @ ibc-solar.de
www.ibc-solar.com