受控文本
Controlled Copy

ZNSHINESOLAR

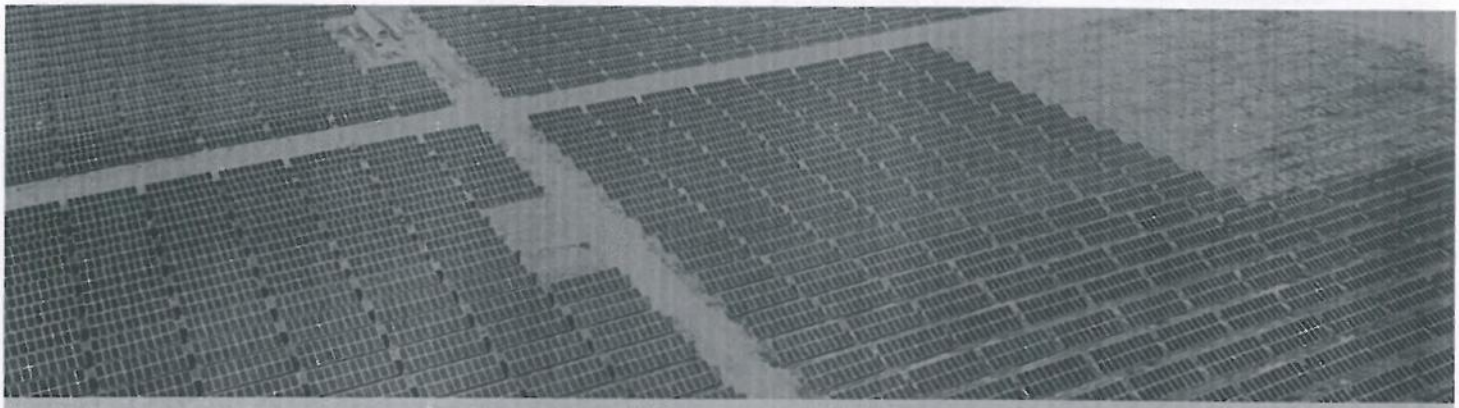

ZNSHINE PV MODULES INSTALLATION MANUAL

正信太阳能光伏组件安装说明书

Regular Single-glass Modules

常规单玻组件

受控文本
Controlled Copy

ZNSHINE PV-TECH CO.,LTD.
正信光电科技股份有限公司

No. 229 Tongda Avenue,Suqian Economic and Technological Development Zone,Suqian City,Jiangsu,CHINA
地址：中国江苏省宿迁市宿迁经济技术开发区通达大道229号

Tel：+86 519 6822 0233

E-mail：info@znshinesolar.com

文件编号 Document No.：QES/ZX-RD-III026G

受控文本
Controlled Copy

DOCUMENT COUNTERSIGN 文件会签			
DEPARTMENT 部门	Manufacturing Sub Center 制造分中心	Quality Sub Center 质量分中心	Business Sub Center 商务分中心
COUNTERSIGNER 会签	2024.9.27	2024.9.27	2024.9.27
DOCUMENT NO. 文件编号	QES/ZX-RD-III026G	**COMPILER** 编制	2024.9.27
EDITION 版本	G	**REVIEWER** 审核	2024.9.27
EFFECTIVE DATE 生效日期	2024.9.30	**APPROVER** 批准	20240927

ZNSHINESOLAR 正信光电科技股份有限公司
ZNSHINE PV-TECH CO.,LTD

REGULAR SINGLE-GLASS MODULES INSTALLATION MANUAL
常规单玻组件安装说明书

本文件为受控文本 Controlled Copy

1. INTRODUCTION FOR INSTALLATION MANUAL 安装说明书介绍 ..... - 1 -
1.1. DISCLAIMER 免责申明 ..... - 1 -
1.2. LIMITATION OF LIABILITY 责任范围 ..... - 1 -
2. SAFETY PRECAUTIONS 安全措施 ..... - 2 -
2.1. WARNING 警告 ..... - 2 -
2.2. GENERAL SAFETY 通用安全 ..... - 2 -
2.3. HANDLING SAFETY 操作安全 ..... - 3 -
3. UNLOAD/TRANSPROTATION/STORAGE 卸货、运输和存储 ..... - 4 -
3.1. MAKERS ON OUTER PACKAGING 包装标示说明 ..... - 6 -
3.2. UNLOADING WARNNING 卸货注意事项 ..... - 7 -
3.3. SECONDARY TRANSPORT AND WARNING 二次运输及注意事项 ..... - 8 -
3.4. STORAGE 存储 ..... - 9 -
4. UNPACKING SAFETY 拆包安全 ..... - 10 -
5. INSTALLATION 安装 ..... - 11 -
5.1. INSTALLATION SAFETY 安装安全 ..... - 11 -
5.2. ENVIRONMENT CONDITIONS AND SITE SELECTION 环境条件与安装地址选择 ..... - 14 -
5.3. TILT ANGLE OF INSTALLATION 光伏组件安装倾角 ..... - 18 -
5.4. INSTALLATION REQUIREMENTS FOR BIFACIAL CELLS MODULE 双面电池组件安装要求 - 20 -
5.5. INSTALLATION METHOD 安装方法 ..... - 21 -
6. MODULE MAINTENANCE 组件维护 ..... - 36 -
6.1. PANEL VISUAL INSPECTION AND REPLACEMENT 组件外观检查和替换 ..... - 36 -
6.2. CONNECTOR AND CABLE INSPECTION 连接器和线缆检查 ..... - 37 -
6.3. CLEANING 清洗 ..... - 37 -
Appendix A： CORROSION PREVENTION INSTALLATION GUIDE 防腐蚀安装指南 ..... - 41 -
Appendix B： INSTALLATION GUIDE FOR PV MODULE WITH COMPOSITE FRAME 复合材料边框组件安装指南 ..... - 45 -

1. INTRODUCTION FOR INSTALLATION MANUAL 安装说明书介绍

受控文本 Controlled Copy

This INSTALLATION MANUAL applies to ZNSHINE PV-Tech Co., Ltd and its cooperated or affiliated companies. Each cooperated or affiliated companies includes but not limited to [Zhengxin photoelectric technology (Suqian) Co., Ltd]. This INSTALLATION MANUAL applies to the installation, maintenance and using of the single glass solar modules manufactured by ZNSHINE PV-TECH Co., Ltd and its cooperated or affiliated companies. (hereinafter referred to as "ZNSHINE SOLAR"). Failure to follow these INSTALLATION MANUAL could result in personal injury or property damage. 本安装说明书适用于正信光电科技股份有限公司及其合作或关联公司，各合作或关联公司包括但是不限于【正信光电科技（宿迁）有限公司】。本安装说明书适用于正信光电科技股份有限公司及其合作或关联公司（以下简称 正信光电）生产的单玻系列太阳能组件的安装、维护和使用。如果不遵守，将可能导致人员伤亡或财产损失。

Installation and operation of PV modules requires professional skills and should only be performed by qualified professionals. Please read the "Safety and Installation Instructions" carefully before using and operating the modules. 安装和操作太阳能组件需要专业的技能，只有专业人员才可以从事该项工作。请在使用和操作组件之前仔细阅读安全和安装说明。

The word "module" or "PV module" used in this manual refers to one or more single glass solar modules. Please keep this manual for future reference. 本说明书中的"组件"或"PV组件"指的是一个或多个单玻系列太阳能组件。请保留此说明书以供将来参考。

1.1. DISCLAIMER 免责申明

1) ZNSHINE PV-TECH Co., LTD reserves the rights to change this installation manual without prior notice. Please refer to our product lists and documents published on our website at: *https://www.znshinesolar.com* as these lists are updated on a regular basis. 正信光电科技股份有限公司保留在没有预先通知的情况下变更本安装说明书的权利，最新版请参考正信光电网站（https://www.znshinesolar.com）上的产品和文件资料。

2) In the event of any inconsistency among different language versions of this document, the Chinese version shall prevail. 如果本说明书的不同语言版本有描述不一致的情况，以中文版为准。

3) Failure of the customer to follow the requirements outlined in this Manual during the installation (including without limitation to packing/unpacking, loading/unloading, transportation, storage, installation, use, operation or maintenance, etc.) of the module will result in the invalidity of product's limited warranty. 客户在安装组件过程中（包括但不限于产品拆/包装、装/卸货、运输、存储、安装、使用、运行或维护等）未按照本说明书中所列出的要求操作，会导致提供给客户的产品有限质保失效。

4) ZNSHINE SOLAR is not responsible for any infringement of third party patents or any other rights arising from the use of solar PV modules. 使用太阳能光伏组件过程中所产生侵犯第三方专利权或任何其他权利，正信光电概不负责。

5) The information in this manual is based on ZNSHINE SOLAR's knowledge and experience and is believed to be reliable, but such information including product specification (without limitations) and suggestions Do not constitute a warranty, expresses or implied. 本说明书的信息基于正信光电的被认为是可靠的知识和经验，但是包括但不限于如下的产品规格的这些信息和相关的建议并不构成任何保证条款，无论明示的或隐含的。

1.2. LIMITATION OF LIABILITY 责任范围

ZNSHINE SOLAR is not responsible for any damages of any kind, including but not limited to any product damages, personal injury or any other property losses, as resulting from any improper operations or faults by the customers during the handling of the products as failure to follow the instructions in this Manual. 正信光电对于客

户未按照本安装说明书说明的任何不适当操作行为或者失误造成的任何损失不承担赔偿责任，包括但不限于由于组件操作过程中未遵循本说明书中的说明而造成的任何产品毁损、人身伤害或其他财产损失。

受控文本 Controlled Copy

2. SAFETY PRECAUTIONS 安全措施

2.1. WARNING 警告

Before attempting to install, wire, operate and/or service the module and other electrical equipment, all instructions should be read and understood. Direct current (DC) is generated when the battery surface of the module is exposed to direct sunlight or other light sources, and direct contact with the live parts of the module, such as terminals, may result in death of personnel whether connected to the module or not. 对组件进行安装、接线、操作或维护前，应阅读并理解所有安全细则。当组件电池面直接暴露在阳光或其他光源下时，会产生直流电(DC)，无论是否连接组件，直接接触组件带电部分，例如接线端子等，将可能导致人员伤亡。

2.2. GENERAL SAFETY 通用安全

ZNSHINE SOLAR modules are designed to meet the requirements of IEC 61215 and IEC 61730, Safety Class: class II. Modules rated for use in this application class may be used in system operating at greater than 50V DC or 240W, where general contact access is anticipated. Modules qualified for safety through IEC 61730-1 and IEC 61730-2 and within this application class are considered to meet the requirements for safety class II equipment. 正信光电的组件设计符合国际IEC61215和IEC61730标准，其安全等级评级为Class II类；组件可用于公众可能接触的大于直流50V或240W 以上的系统。并且组件通过了IEC61730-1和IEC61730-2 两部分，满足安全II类的要求。

1) All installation work must comply with the local codes and the relevant international electrical standards. 所有的安装工作必须完全遵守当地法规和相应的国际电气标准。
2) ZNSHINE SOLAR recommends that PV module installation is conducted by personnel who have been professionally trained in PV system installation. Operation by personnel who are not familiar with the relevant safety procedures will be very dangerous. 建议由经过光伏系统安装专业培训的人员进行安装。如由不熟悉相应安全程序的人员操作将会非常危险。
3) Do not allow unauthorized persons to access the installation area or module storage area. 不允许未经授权的人员接近安装区域或者组件仓储区域。
4) Protective clothing (non-slip gloves, clothes, etc.) must be worn during installation to prevent direct contact with 30V DC or greater, and to protect hands from sharp edges. 使用恰当的防护措施（防滑手套、工作服等）以避免安装人员与30V直流或更高电压直接接触，同时避免在安装过程中手直接与组件锋利的边缘接触。
5) Prior to installation, remove all metallic jewelry to prevent accidental exposure to live circuits. 安装时请不要佩戴金属饰物，以免戳穿组件，引起触电危险。
6) When installing modules in light rain, morning dew, take appropriate measures to prevent water ingress into the connectors, f. e. using connector endcaps. 如果在阴雨、晨雾天气安装组件，需采取适当的措施避免水浸入连接器。
7) Use electrically insulated tools to reduce the risk of electric shock. 请使用绝缘工具以降低触电的风险。
8) Do not use or install broken modules. 不要使用或安装已损坏的组件。
9) External or artificially concentrated sunlight shall not be directed onto the front or back face of the PV module. 外部或人为聚焦的阳光不得直射到光伏组件的正面或背面。
10) Do not contact module if the front or rear glass is broken. This action may cause electric shock. 组件的前板玻璃或后板玻璃发生破损时不要触摸组件，这个举动可能会导致触电。

11) Do not attempt to repair, disassemble, move any part of the PV module. The module does not contain any reusable parts. 不要试图修复、拆解或移动组件中的任何部分，组件内没有用户可二次利用的元件。

12) Do not connect or disconnect the module when it is energized or connected with an external power supply. 当组件有电流或外部电流出现时，不得连接或断开组件。

受控文本 Controlled Copy

13) A single PV module may generate a voltage of more than 30V in direct sunlight, and there is potential danger in coming into contact with voltages above 30V. 单一光伏组件在阳光直射下可能会产生 30V 以上的电压，接触 30V 以上的电压会存在潜在危险。

14) When the inverter ground alarm, wear a good protective device, disconnect the connector of the inverter and the problem component under safe conditions, do not touch other parts of the modules to avoid potential risk of electric shock.当逆变器发生接地报警时，需佩戴好防护装置，在安全的条件下断开逆变器和问题组件的连接器，不要触碰组件其他部位，以避免潜在的触电风险。

2.3. HANDLING SAFETY 操作安全

1) Do not stand, walk on or lean on the module directly. 禁止直接在组件上站立、踩踏、行走或跳跃。



2) Do not damage or scratch the front or backside surfaces of the module. 请不要损坏或划伤组件的前后表面。

3) Do not drag, scratch, bend the output cable with force or with too tight connection. The insulation of output cable can break and may result in electricity leakage or shock. 请不要拉扯、划伤、用力弯折或过紧安装输出线缆，否则线缆的绝缘部分会被损坏导致电流泄露或触电。

4) If there is an open fire, please extinguish it with a dry powder extinguisher after disconnecting the power supply, cannot use liquid such as water to extinguish the fire. 如有明火请在断开电源后用干粉灭火器扑灭，不可用水等液体扑灭。

5) Do not install or handle modules under wet, rain, snow or windy conditions. Place disassembled PV modules correctly.请勿在潮湿、下雨、下雪或大风的情况下安装或处理组件,并将已拆包组件进行妥善处置。

6) Take care to keep modules and in particular their electrical contacts, clean and dry before installation. If connector cables are left in damp conditions then the contacts may corrode. Any module with corroded contacts should not be used. 安装前，请保持组件电器元件的清洁与干燥。如果线缆插头在潮湿条件下互相接触，会被腐蚀。任何被腐蚀的组件都不能被使用。

7) Please Do not loosen, unscrew or peel the PV module bolts and frame glue. This may lead to a reduction of the module's load rating and potential damage from a fall. 请不要松动、拧下、剥离，光伏组件的螺丝或边框胶，有可能导致组件载荷下降，甚至掉落。

8) Do not drop PV modules or allow objects to fall down on the PV modules. 请不要让物体直击组件或物体直接掉落在组件上。

9) During installation or under sunlight, it is forbidden to directly touch the junction box, connector, cable and other electrified bodies of the module without any protection, regardless of whether the PV module is connected with the system. There is a risk of scalding or electric shock. 在安装期间或阳光下，禁止在没有任何保护的情况下用手直接触摸组件的接线盒、连接器、线缆等带电体，无论光伏组件是否与系统连接。这会有烫伤或者电击的危险。

10) PV modules have no switch. PV module can only be stopped by moving it away from the light or shielding it with cloth, cardboard, or completely opaque material, or by placing the front of the module on a smooth, flat surface. 光伏组件没有开关，只能通过将光伏组件挪离光照或者用布、硬纸板或者完全不透光的材料遮挡,或者将组件正面放置在光滑、平坦的表面上才会使组件停止工作。

11) Do not discard the modules at will; special recycling is required. 禁止组件随意丢弃，需要专门回收。

受控文本 Controlled Copy

3. UNLOAD/TRANSPROTATION/STORAGE 卸货、运输和存储

Precautions and general safety rules:

预防措施和通用安全细则：

1) Modules should be stored in a dry and ventilated environment to avoid direct sunlight and moisture and extra precautions should be taken to prevent connectors from being exposed to moisture or sunlight, like using connector endcaps. 应将组件储存在干燥且通风的环境中，同时需要采取措施避免连接器暴露在潮湿或者阳光下，比如使用连接器端帽。

2) The modules should be stored in the original ZNSHINE SOLAR package before installation. Protect the package from damage. Unpack the modules as per the recommended unpacking procedures. The whole process of unpacking, transport and storing should be handled with care. 组件在安装前应存储在原包装箱内，请保护好包装不要使其受损。按照建议的拆包步骤打开组件包装。打开、运输和存储过程需小心操作。

3) Unpacking must be carried out by two or more persons at the same time. 拆包时，必须由2个或2个以上人员同时操作。

4) Handling the modules requires two or more people with nonslip gloves and both hands. 搬运组件时应由2个或以上的人带防滑手套同时双手手持组件搬运。

5) Do not pull the cables, junction boxes or frames to handle modules. 禁止拉扯组件的导线、接线盒或边框来搬运组件。

6) Do not handle the modules over-head. 禁止头顶组件搬运。

7) Do not place excessive loads on the module or twist the module. 禁止在组件上施加过度的载荷或扭曲组件。

8) Do not drop or place objects (such as tools) on the modules. 禁止掉落或堆放物品（如安装工具）在组件上。

9) Do not put the modules in a place that is not supported or stable. 禁止将组件置于无可靠支撑或未固定环境下。

10) Do not allow the modules to come in contact with sharp-pointed objectives to prevent them from scratches, avoiding a direct impact on the safety of modules. 禁止组件与尖锐物接触，以防划伤，避免直接影响组件的安全性。

11) When transporting or installing modules, do not rely on the backsheet or back glass to support the modules. 在搬运或者安装组件的时候，不要靠背板或背面玻璃支撑组件。

12) Do not paint or apply any other adhesive on the surface of the PV module. 严禁在光伏组件的表面刷油漆或者涂任何其他的粘胶剂；

13) Modules shall not be used in environments containing hydrocarbons, phenols, ketones, ammonia compounds, etc. that are corrosive to plastics. It is prohibited to contact or expose photovoltaic modules or their plastic components (such as junction boxes, covers, connectors, etc.), cables, electrical interfaces to any chemical substances [including but not limited to Gasoline, White Flower oil , Wood lock oil, Mold temperature oil, Engine oil （such as KV46）, Lubricating grease, Grease（such as Molykote EM-50L）, Hand cream（such as Vaseline、Nivea）, Gear oil, Rust-proof oil, Lubricating oil, Stamping oil, Hydraulic oil, Turbine oil, Diesel, Cooking oil, Olive oil, Butter, Margarine, Acetone, Alcohol (ethanol), Essential balm, Bone-setting liquid,

受控文本 Controlled Copy

Banana oil, Release agent（such as Pelicoat S-6）, Adhesive and potting materials capable of generating oxime gas（such as KE200、CX-200、chemlok）, TBP, Cleaning agent, Rust inhibitors, Lubricants, Pesticides, Potting, Surfactant, Ink thinner, Oil-based sealing agent, Adhesive tape adhesive, Thermally conductive compound, Organic solvents, Acids, Bases, Salts, Alcohols, etc.]光伏组件不得在含有烃、酚、酮、氨合物等与塑料有腐蚀的环境中使用。禁止将光伏组件或者其材料塑料件（如接线盒盒体、盒盖、连接器等）、线缆、电气接口接触到或暴露于任何化学物质【包括但不限于汽油、白花油、活络油、模温油、机油（如KV46）、润滑脂、油脂（如Molykote EM-50L等）、护手霜（如凡士林、妮维雅等）、齿轮油、防锈油、润滑油、冲压油、液压油、涡轮油、柴油、食用油、橄榄油、黄油、人造黄油、丙酮、酒精（乙醇）、风油精、正骨水、天那水、脱模剂（如Pelicoat S-6等）、可产生肟气的粘板胶及灌封胶（如KE200、CX-200、chemlok等）、TBP（可塑剂）、清洗剂、防锈剂、润滑剂、杀虫剂、填充剂、表面活性剂、油墨稀释剂、油性封孔剂、胶带胶粘剂、导热复合物、有机溶剂、酸类、碱类、盐类、醇类等】。

14) Before the secondary transportation vehicle is started, it should be bundled with net ropes. The rope should be fastened to prevent damage to the modules during the transportation. If the safety rope is used, the contact part between the safety rope and the carton shall be separated by paper corrugated or other cushioning materials. The speed of the vehicle carrying the modules should be ≤5 km/h and ≤ 3 km/h for turning, so as to avoid sudden stop and rapid start. 在二次搬运车辆启动前，应采用网绳捆绑，绳索应系牢，严防组件在运输过程左右晃动造成损坏。如果采用安全绳，则安全绳与纸箱接触部分用纸护楞或其他材质的缓冲材料隔开。搬运组件车辆行驶速度宜≤5公里/小时，拐弯速度≤3公里/小时,避免急停和急速启动。

15) In any circumstances, for vertical landscape packages, it shall not be stacked more than two layers; for vertical portrait packages, stacking is not allowed. Example for vertical landscape package and vertical portrait package is shown as follows: 任何情况下，短边竖放包装请勿堆叠超过2层，长边竖放包装不允许堆叠。短边竖放包装（横式包装）和长边竖放包装（立式包装）样式如下：



Vertical landscape package
(short-side vertically placed)
短边竖放包装（横式包装）



Vertical portrait package
(long-side vertically placed)
长边竖放包装（立式包装）

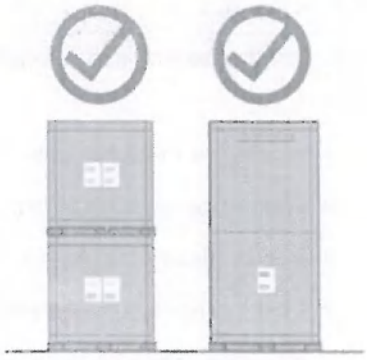

Right Examples
正确示例

3.1. MAKERS ON OUTER PACKAGING 包装标示说明

受控文本 Controlled Copy

3.1.1. Need both hands to handle it carefully. 需要双手小心操作 	3.1.2. Uninstalled modules must be kept dry, not expose to rain or moisture. 禁止未安装的组件淋雨或者受潮 
3.1.3. Modules in carton are fragile, which must be handled with care. 纸箱中的组件为易碎物品，搬运时应小心轻放 	3.1.4. The packaging must be transported upright. 包装在运输时应竖直向上 
3.1.5. Do not step on the package and module. 禁止在包装箱和组件上面踩踏 	3.1.6. Modules shall be stacked as required, not exceeding the maximum number of layers printed on the outer packaging. (no more than two layers). 堆叠组件时请勿超过外包装箱上印刷标志的最高层数限制（最多堆码2层） 
3.1.7. One module shall be handled by at least two persons together. Modules are placed vertically. 一块组件至少需由2个人同时搬运，组件是竖直放置 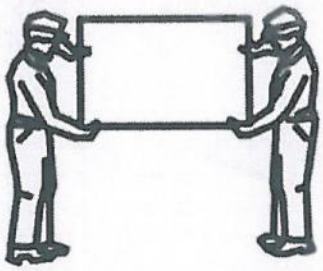	

受控文本 Controlled Copy

3.2. UNLOADING WARNNING 卸货注意事项

3.2.1. When crane is used to unload the modules, please choose and use specialized tooling according to the weight and size of the module. Before lifting, check whether the pallet and the carton are damaged and whether the hoisting ropes are strong and firm. Please adjust the position of the sling to keep the modules steady. To ensure the safety of the module, wooden sticks, boards or other fixtures of the same width as the outer packing cases should be used on the upper part of the box to prevent the sling from squeezing the pallet and damaging the modules. When placing the modules, do not lower the packing box too quickly. Two people shall support at the two sides of the righting carton gently to place it on a flat ground. **For vertical landscape packages, do not lift up more than FOUR pallets of modules at once; for vertical portrait packages, do not lift up more than TWO pallet of modules at once. Do not unload modules under the weather conditions of wind more than 6 class (in Beaufort scale), heavy rain or heavy snow.**

采用吊车卸货时，请使用专用工装，吊装前请根据组件重量和尺寸选用足够拉力的吊装工具。吊装前应确认托盘和纸箱是否有破损及吊装的绳索是否结实、牢固。吊装时请调整吊带位置保持组件重心平稳，应在包装箱的顶部使用与其相同宽度的木板或其他固定装置，防止吊带挤压包装箱，导致组件破损。请匀速操作吊具，吊装接近地面时，两人一人一边扶正纸箱轻轻放在平坦位置上。**横式包装一次性最多允许吊装4托组件，立式包装一次性最多吊装2托组件。严禁在风力大于6级（蒲福风级）、大雨或大雪的气象条件下吊装光伏组件。**



3.2.2. Use a forklift to remove the module pallets from the truck.
请使用叉车将组件从货车上卸下来。

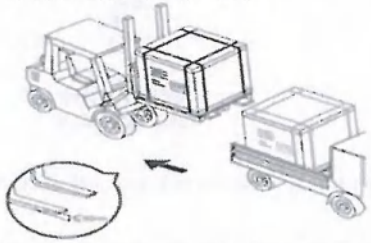

3.2.3. Put the modules on level ground.
将组件放置于水平地面上。

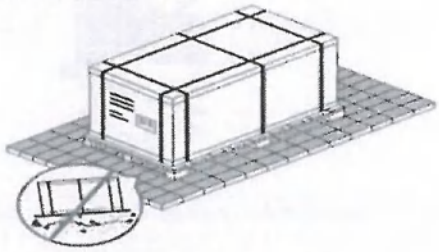

3.2.4. Do not stack the modules at the project site.
禁止在项目地将组件堆码。

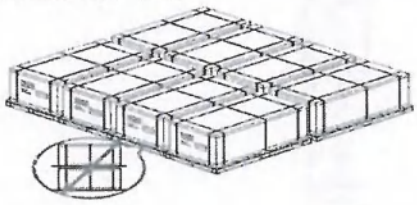

3.2.5. Store the module in a dry and ventilated place.
将组件放置在通风干燥处。

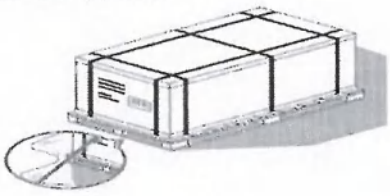

3.2.6. Cover the module with waterproof material to prevent it from moisture.
使用遮雨布盖住组件，防止组件受潮。



3.3. SECONDARY TRANSPORT AND WARNING 二次运输及注意事项

受控文本 Controlled Copy

3.3.1. Do not remove the original packages if the modules require long-distance transport or long-term storage.
如果组件需长途运输或长期存储，请不要拆除原包装。

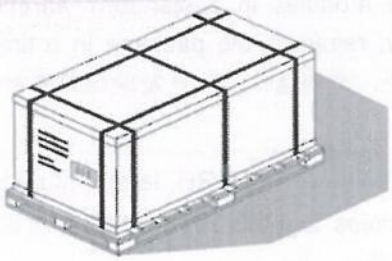

3.3.2. Packaged products can be transported by land, sea or air. During transportation, make sure that the package is fixed securely to the shipping platform without movement. Do not Stack more than two layers on truck.
包装完的成品可以通过陆运、海运、或空运进行运输。在运输过程中：请将包装箱固定在运输平台上，确保包装不会倾倒、移位。正常卡车运输时，最多2层叠加后运输。（以陆运为例）



3.3.3. Only one layer stacking is only allowed for transport at the project site.
项目现场托运，只允许 1 层运输。

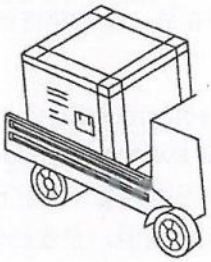

3.3.4. No transport or handling by pedi-cab or improper vehicle as shown below.
禁止三轮车，马车或其他不合理车辆转运。

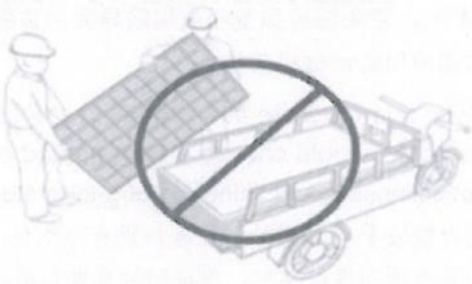

3.3.5. Do not transport the module with rope as shown below.
禁止用绳子背组件。

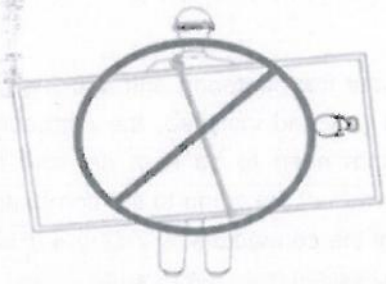

3.3.6. Do not carry the modules on the back of one person as shown below.
禁止单人背组件。



3.3.7. Do not allow pallets to exceed the loading area of the transport vehicle.
禁止托盘超出运输车辆的装载区。

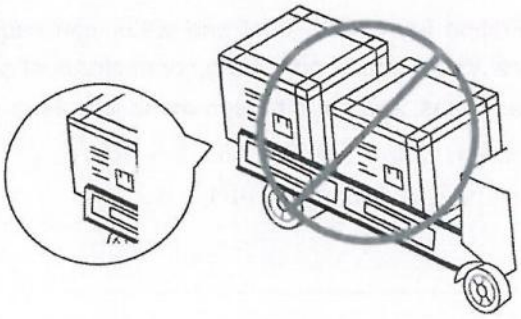

3.4. STORAGE 存储

受控文件 Controlled Copy

1) Do not remove the original package and keep the wrapping film and carton box in a good condition, if the modules require long-distance transport or long-term storage. 如果组件需要长途运输或长期存储，请不要拆除原包装，保持缠绕膜和包装纸箱完好。

2) For long-term storage, it is recommended to store the modules in a standard warehouse with regular inspection, and under confirming of your personal safety, reinforce the package in a timely manner if any anomalies are found. 组件长期存储建议存储在标准仓库中，定期巡检，一旦发现倾斜异常请在保证人身安全情况下及时加固处理。

3) Storage in project site warehouse or normal warehouse (moisture＜85%RH, temperature in the range from -40℃ to +50℃): Do not stack different types of PV modules together. 项目现场及常规仓库存储（湿度<85%RH；温度：-40℃~+50℃）：不同类型组件不允许堆叠在一起。

4) Do not expose the modules to rain or moisture. Store the finished product in a well ventilated, waterproof, dry and smooth place (for vertically portrait package, the inclination of ground needs to be less than 4°), to avoid damage or dumping of the modules due to ground deformation or collapse. The modules should be centrally stored with pallet spacing within 10cm. And the modules should be covered with waterproof material. 禁止淋雨或者受潮，请将包装的成品置于通风、防雨、干燥及平整的地方（立式包装存储区域若存在倾角，要求倾角≤4°），避免因地面变形或塌陷导致包装破损或倾倒。组件尽量集中存放，建议保持托盘间距在10cm之内。组件需使用防水材料盖住。

5) If you need to store the modules in the project site, do not choose soft ground and the ground that is easy to collapse, should choose a hard ground or a higher ground with flat surface to ensure the module packages not collapsing and tilting for long-term storage. 仓库的货架要有足够的承载能力和存放空间，定期巡检确保货物存放安全。如果需要在项目地存储组件，禁止选择松软、容易塌陷的地面，应选择硬质地面或地势较高的地面并对地面进行整平，保证组件长期存放不会塌陷、倾斜。

6) The module must be installed as soon as possible in the project site and must not be exposed to rain or damp. ZNSHINE SOLAR shall not be responsible for any damage or collapse of the modules caused by moisture in the packaging. 到项目地组件应尽快安装，禁止暴露在雨水和潮湿环境中，如因为包装受潮导致组件破损、倒塌等问题，正信光电不承担责任。

7) In order to avoid external mater such as sand or water vapour from entering and causing connection safety problems, once the modules are taken out of the packing box and installed, the connectors between the modules need to be connected in time, and the connectors need to be kept dry and clean during the installation process. Before connecting the modules at both ends of the string to the combiner box or inverter, plug the connectors with dust plugs to avoid contamination of the connectors.为了避免沙子或水汽等异物进入导致连接安全问题，组件一旦从包装箱取出安装后，需要及时的把组件之间连接器进行互联，安装过程中保持连接器的干燥和清洁。组串两端的组件在接入汇流箱或逆变器前，用防尘塞将连接器塞上,避免连接器受到污染。

8) Please note that contamination from sand, dust and water can cause arcing, electric shock or difficulty in plugging the connectors, etc.We recommend adding connector dust plugs as a temporary protective measure in dusty, saline and polluted areas, and do not recommend long-term use (within 1 month).请注意,来自沙子、灰尘和水等污染会导致连接器的电弧、电击或插接困难等,我们建议在粉尘重、盐碱度高、污染严重的地区,增加连接器防尘塞作为临时防护措施,不建议长期使用(1个月之内)。

4. UNPACKING SAFETY 拆包安全

受控文本 Controlled Copy

1) For unpacking outdoors, it is prohibited to operate in rainy conditions. Because the carton will become soft and damaged after it gets wet in the rain. The stacked PV modules (hereinafter referred to as "modules") may tip over, which may cause damage or injury to personnel. 在户外拆包时，禁止在雨中作业，因为外包装纸箱会受潮而变软或者损坏，包装箱里的组件有可能会发生倾斜，倾倒将导致组件损坏以及人员伤害。

2) For a windy site, it is necessary to pay special attention to safety. Especially, it is not recommended to transport or unpacking the modules in high wind conditions. The unpacked modules must be tied down to avoid any unwanted movement. 在有风的情况下，需要更加关注现场的安全管理，特别是在强风环境下，正信光电不建议在这种环境下运输及拆卸组件。已经拆包的组件需要采取恰当的方式固定起来。

3) The work surface is required to be level to ensure that the package can be placed stably, avoiding sliding. 作业地面需要保证包装箱能够水平稳定的放置，避免倾倒。

4) Wear protective gloves during unpacking to avoid hand injury and fingerprints on the glass surface. 拆包时，请佩戴劳保手套以避免手受伤，同时确保不会在组件玻璃表面留下手指印。

5) If all the modules are not taken out after unpacking, the remaining modules shall be placed horizontally and repackaged to prevent them from tipping. When packaging, please note that the glass side of the bottom module should face up, the glass side of the middle modules should face down, and the glass side of the top module should face up. Stacks of modules should contain no more than 16 modules, and the frames should be aligned. 如果拆包后没有将组件全部取出，则将剩余的组件水平放置后重新打包，防止倾倒。（打包时，最下层组件玻璃面朝上，其他组件的玻璃面朝下，最上层的组件需玻璃面朝上放置）。组件的最大堆叠数量不超过16片。

6) If the unpacked modules are not installed immediately, they should be fixed to the stand supporter with a safety rope under weather of 6 class wind (the modules should be less than 12 pieces). 如果组件拆包后短时间内不进行安装，6级以内的大风天气（组件少于12片），则需要使用安全绳将立放的组件与靠架进行固定。

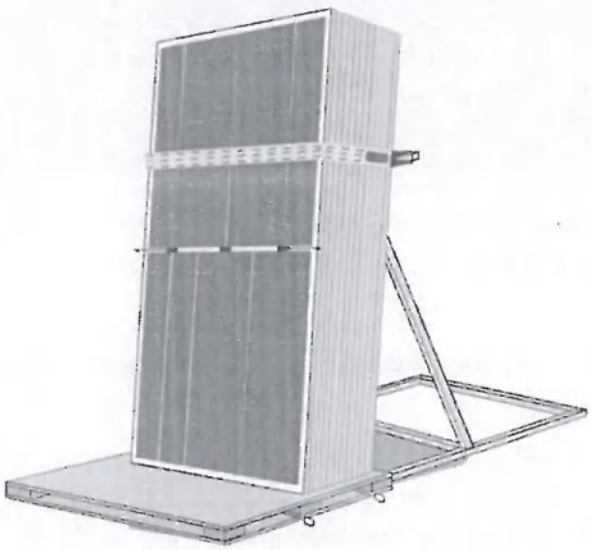

In addition to the above points for attention, consider professional on-site unpacking, exception handling rules, please refer to ZNshine Solar "Spec. for PV Module Unloading, unpacking and Secondary Transferring". 除以上注意事项外，考虑专业性现场拆包、异常处理细则，请参考正信光电《光伏组件卸货、拆包、二次转运规范》。

5. INSTALLATION 安装

5.1. INSTALLATION SAFETY 安装安全

受控文本 Controlled Copy

1) ZNSHINE SOLAR modules can be mounted in landscape or portrait orientation, the impact of dirt shading the solar cells can be minimized by orienting the product in landscape. Please pay attention that the modules can only be installed on vertical racking not horizontal racking when customers choose landscape mode. For all PV modules, ZNSHINE SOLAR does not recommend short side installation. 正信光电的太阳能组件可以横向或纵向安装，采用横向安装的方式可以使灰尘对太阳能电池板的遮光影响最小化。选择横装时组件可以共用垂直方向的支架，但不能共用同一根水平方向安装的支架。针对所有的光伏组件，正信光电不推荐短边安装。

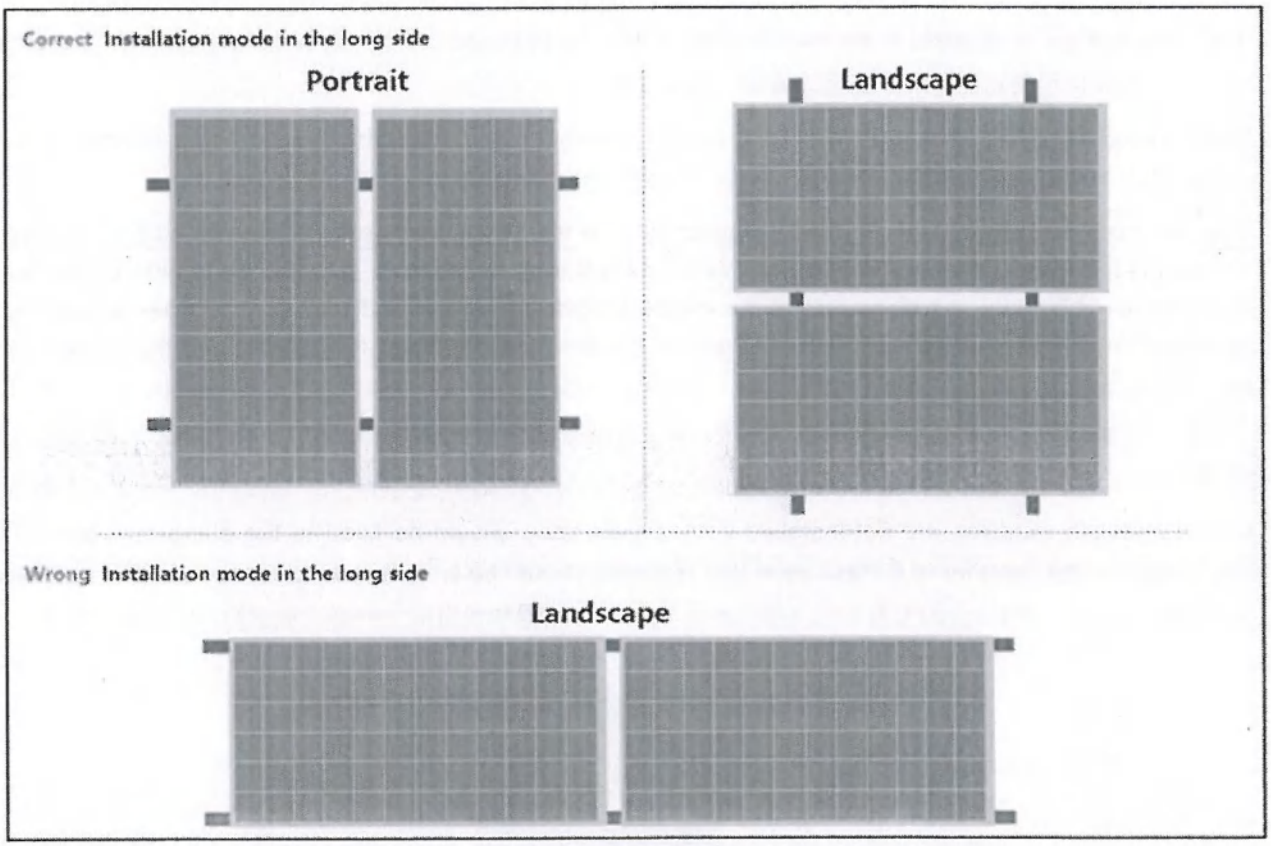

2) Always wear dry insulation protection equipment: insulated tools, head gear, insulated gloves, safety belt and safety shoes (with rubber soles). 请使用干燥的绝缘防护措施：如绝缘工具、安全帽、绝缘手套、安全带和安全鞋（橡胶底）。

3) Make sure flammable gasses are not generated or present near the installation site. 请确保安装地点附近，不会有或者不会产生可燃性气体。

4) Keep the PV module packed in the carton until installation. Please install immediately after unpacking. Please keep the connector dry and clean during installation to avoid the risk of electric shock. Do not perform any work if the terminals of PV module are wet, until they are dry. 安装的时候再把组件拆包。请在开箱后立即安装，安装时请保持连接器干燥清洁，以免触电风险。如果光伏组件的连接器端子潮湿则禁止安装，直至干燥后方可安装。

5) Packaging corner guard and module edge guard play a role in protect in the process of packaging and transportation of PV modules, which can be removed during installation. 包装护角与组件护边在包装及运输过程中起到保护组件的作用，安装时自行去除。

6) Please take measures to insulate during PV module installation and wiring. 在光伏组件安装和布线期间，必须

进行绝缘防护。

受控文本 Controlled Copy

7) Do not hit or put excessive load on the front or back of PV modules, this may break the cells or cause microcracks. 不要在组件的正面或背面放过重的物体或者进行撞击，这可能会损坏电池片或者造成电池片隐裂。

8) Do not unplug the connector if the system circuit is connected to a load. 如果系统电路与负载接通，请不要拔下连接插头。

9) Do not stand on the module glass. There is a risk of injury or electric shock if glass is broken. 不要站在玻璃上，以免玻璃破碎造成伤害或引发触电危险。

10) Do not work alone (always work as a team of 2 or more people). 不要单独工作（一直保持由2个或更多的人组成团队工作）。

11) Do not damage the back glass of PV modules when fastening the PV modules to a support with bolts. 在通过螺栓将光伏组件紧固到支架上时，不要损坏光伏组件的背面玻璃。

12) Do not drill holes in the frame. It may cause corrosion of the frame or PV modules burst. 不要擅自在组件的边框上进行钻孔，可能会引起边框腐蚀以及组件爆裂。

13) Do not damage the surrounding PV modules or mounting structure when replacing a PV module. 更换光伏组件时，不要损坏周围的光伏组件或安装结构。

14) Cables should be fixed in the area not exposed to direct sunlight to prevent cables aging. 电缆应固定在不受阳光直射区域，防止电缆老化。

15) Protective measures must be taken in the process of installation to avoid force extrusion or impact on the modules. 安装时采取防护措施，以避免组件受到外力挤压或撞击。

16) The open area should minimize arc coil, which can reduce the risk of induced lightning impact on PV module. 开阔的区域应尽量减少电弧线圈，以减少雷电对光伏组件的影响。

17) A PV module with the reflective film will exhibit some light reflection and light pollution at an angle. If there are local regulations, this may need to be evaluated by the designer.贴有反光贴膜的组件在一定角度上会有一些光反射和光污染。如果当地有规定的话，可能需要设计人员对此进行评估。

18) When installing modules on roof mounted structures, please try to follow the "from top to bottom" and/or "from left to right" principle, and don't step on the module. This will damage the module and would be dangerous for personal safety. 对于BIPV或是安装在屋顶的结构，请尽量遵循"从上到下"和/或"从左到右"的安全原则，请不要站到组件上面去，因为那样会损坏组件，也会对人身安全造成危险。

19) The mechanical loads described in this manual are the test loads. For calculating the equivalent maximum design loads, a safety factor of 1.5 (Test loads=Design loads×1.5 security coefficient) needs to be considered in compliance with the requirements of the local laws and regulations. The design loads are strongly related to the construction, applied standards, location, and local climate conditions; therefore, must be determined by the racking suppliers and/or the professional engineers. For detailed information, please follow local structural code or contact your professional structural engineer. The mechanical load bearing is dependent upon the mounting methods used and failure to follow the instructions of this manual may result in different capabilities to withstand snow and wind loads.本说明书提到的载荷对应测试载荷。对于符合当地法律法规要求的安装方式，在计算许可的最大设计载荷时，需要考虑1.5倍的安全系数 (测试载荷=设计载荷×1.5倍安全系数)。项目设计载荷取决于结构，应用标准，安装地点与当地气候，设计载荷由专业的供应商或者专业工程师确定，详细信息请遵照当地建筑法规或者联系专业的建筑工程师。机械承载取决于所用的安装方法，未能遵循本说明书中的说明可能会导致承受雪和风荷载的变化。

20) We recommend that you insure your solar system against natural hazards (e.g., against lightning strikes). 我们建议你为你的太阳系统投保以防止自然灾害（例如雷击）。

受控文本 Controlled Copy

21) Under the action of gravity, the glass surface of the component will have different degrees of subsidence, and the subsidence of the center of the module is the largest. When bolt-mounted or chute mounted systems are used, the maximum allowable deflection (Δ L in the figure below) is 20 mm without external forces such as wind or snow load. Please note that when storing, transporting, and installing modules, the application of external pressure to the surface of the module may cause the glass surface to sink more.In severe environment such as heavy snow, when the module is subjected to a large snow load, the central part will produce a large shape variable, affecting the appearance of the component. During the deformation of module, if the junction box is in contact with a barrier below it, a large stress will be generated on the glass on the back of the module, and the module may break. Therefore, the distance between the barrier below the module and the junction box must be at least 90mm.受重力作用，组件玻璃面会产生不同程度的下沉，组件中心处下沉量最大。当采用螺栓安装、压块安装或滑槽式安装系统时，在不受风载或雪载等外力作用下，允许的最大挠度（下图中 ΔL）为 20 mm。请注意在储存、运输和安装组件时，在组件表面施加外力重压可能导致玻璃面下沉量变大。在暴雪等恶劣环境下，组件承受极大积雪载荷时，中部会产生较大形变量，影响组件外观。在组件形变过程中，接线盒若与下方障碍物接触，背面玻璃处会产生较大应力，组件有破裂风险，正信要求安装组件下方障碍物与接线盒距离≥90mm。

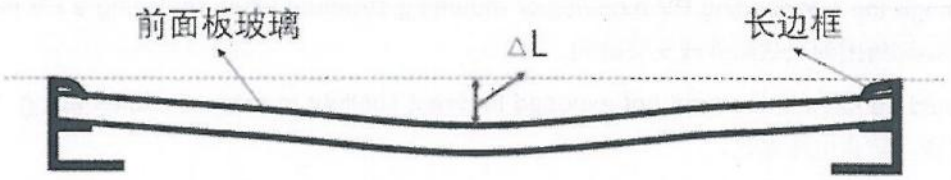

受控文本 Controlled Copy

5.2. ENVIRONMENT CONDITIONS AND SITE SELECTION 环境条件与安装地址选择

ZNSHINE SOLAR module should be installed in the following environmental conditions. 适用于正信光电太阳能光伏组件安装的环境条件如下：

Table 5-1 operation condition

表5-1 组件操作和工作环境

NO 序号	Environmental conditions 环境条件	Range 范围
1	Recommended Working temperature 推荐工作环境温度	-20℃～+50℃
2	Extreme Working temperature 极限工作环境温度	-40℃～+85℃
3	Storage temperature 存储温度	-40℃～+50℃
4	Humidity 湿度	＜85RH%

Remarks: The working environment temperature is the monthly average maximum temperature and minimum temperature of the installation site. The mechanical load bearing capacity of the solar PV modules determined based on the installation method. The professional solar PV system installer must be responsible for calculating the solar PV system machinery when designing the solar PV system load bearing capacity. **备注：**该工作环境温度为安装地点月平均最高温度和最低温度。太阳能光伏组件所能承受的机械载荷是由安装方式来决定的，在光伏系统设计时，机械载荷能力的计算，需要专业的系统安装商来负责进行设计。

PV modules are not suitable for Space. 组件不适用太空环境。

If you are planning to use the PV modules where the water damage (Humidity: ＞85RH%) may be possible, please consult with ZNSHINE SOLAR technical support firstly to determine an appropriate installation method, or to determine whether the installation is possible. 如果您计划在可能出现水渍侵害的地方（湿度：＞85RH%）使用光伏组件，请先向正信光电的技术支持团队咨询以确定合适的安装方法，或确定是否可以安装。

The modules are certified according to the norm IEC 61215 and others for safe operation in moderate climates. The operator needs to consider the effect of the high altitude on the operation of the module, when the modules are installed at high altitude. . 组件根据IEC 61215标准和其他标准进行认证，可在温和气候条件下安全运行。当组件安装在高空时，操作者需要考虑高空对组件运行的影响。

If the modules are used in special installation environments (such as altitudes higher than 2000 meters, heavy snow, severe hail, hurricanes, etc.), it is necessary to consult the technical support department of ZNSHINE in advance.如果组件使用在特殊的安装环境（例如海拔高于 2000 米、暴雪、严重的冰雹、飓风等），需要提前咨询正信光电技术支持部门。

For most places, PV modules should be installed where the sunlight can be maximally acquired throughout the year. In the Northern Hemisphere, the PV modules should typically face south, and in the Southern Hemisphere, the PV modules should typically face north. 对于大多数地方，正信光电太阳能光伏组件应该被安装在全年内能够最大限度接受阳光照射的地方。在北半球安装，组件最好朝南，在南半球安装，组件最好朝北。

When selecting the installation location, avoid areas with trees, buildings, or obstacles because these objects will form shadows on solar PV modules, especially when the sun is at the lowest position on the horizon in winter. The shadow will cause the loss of the output power of the solar photovoltaic system. Although the bypass diode

installed in the PV module can reduce this loss to some extent, do not ignore the shadow factor. 选择安装位置时，避免有树木、建筑物或者是障碍物的区域，因为这些物体会在太阳能光伏组件上形成阴影，尤其是在冬季当太阳光处于地平线上最低的位置时。阴影会造成太阳能光伏系统输出功率的损失，尽管太阳能光伏组件装有的旁路二极管可以一定限度的减少这种损失，也不要忽视阴影的因素。

受控文本 Controlled Copy

Do not install solar PV modules near fire or flammable materials. Do not install solar PV modules where there is water soaking, sprinkler or water spray. 不要在靠近明火或是易燃易爆物附近安装太阳能光伏组件。不要在有水浸泡、有洒水装置或是喷水装置的地方安装太阳能光伏组件。

If the product needs to be used in the offshore environment *, please communicate with ZNSHINE SOLAR technical team in advance to evaluate and use the coastal modules * of ZNSHINE SOLAR. 产品如需使用在近海环境*，请提前与正信光电技术团队沟通评估并使用正信光电的沿海组件*。

Remarks: Offshore environment * refers to the environment within 1km of the straight-line distance Includes on the sea surface from the coastline; Coastal modules * can satisfy most coastal natural environments, but do not have absoluteness. Offshore installation may have additional impact on the performance and life of modules. If you need to install in the offshore environment, please evaluate and confirm with ZNSHINE SOLAR technical team before purchase. If the modules are used in offshore environment projects without evaluation, ZNSHINE SOLAR shall not be responsible for the failure of the modules due to environmental factors. 备注：近海环境*是指在距离海岸线直线距离 1km 以内包括应用于海面上的使用环境；沿海组件*可以满足大多数海边自然环境，但不具备绝对性。近海安装可能对组件的性能和寿命有额外的影响，如需安装近海环境请在购买前提前与正信光电技术团队进行评估确认。未经评估将正信光电组件使用在近海环境项目，进而导致组件因环境因素失效，正信光电不承担任何责任。

Position the modules to minimize the chances of shading at all times of the day. Try to install modules in a location where there is rare shading throughout the year. 对组件进行定位以尽量减少其在一天中任何时间段遮光的可能性。尽量将组件安装在一年中罕有遮阳的位置。

Snow, water or other reflective medium in surrounding environments that intensify light reflection will increase output current and power. And module voltage and power will increase under low temperature condition. 周围环境的雪、水或其他反射介质会增强光反射，导致电流和输出功率的增大。另外在低温时组件的电压和功率也会相应的增大。

According to IEC 61701, salt mist corrosion testing of photovoltaic (PV), ZNSHINE SOLAR PV modules can be installed in corrosive salt areas within proximity of the ocean or sulfurous areas. The module must not be soaked in the water or in the environment (i.e., fountain, spindrift, etc.) where the module would touch water (pure water or brine) for a long term. If the modules are placed in an environment of salt fog (i.e., marine environment) or sulfur (i.e., sulfur sources, volcanoes, etc.), there is a risk of corrosion. It's not recommended to install the modules, when the distance is less than 100m ; and it's recommended to install the modules with the anti-salt function, when the distance is between 100m and 1km. So stainless steel or aluminum materials must be used to contact the PV modules, and the installation position must be processed with anti-corrosion treatment. When modules are installed on land less than 1km away from the sea or in an area where the annual rainfall hours / total annual hours exceed 25%, the connectors are recommended to install waterproof cold shrinkable tubes to prevent the connector from water inlet and corrosion; Silicone rubber is recommended for the material of cold shrinkable tube. 按照IEC 61701要求开展的光伏（PV）组件盐雾腐蚀试验结果表明，正信光电的太阳能组件可以安装在近海或亚硫酸盐区域附近的腐蚀性盐碱地区。组件不得浸泡在水中或长期沾水(纯水或盐水)的环境中(例如喷泉、浪花等)。如果组件置于盐雾(即海洋性环境)或者含硫(即含硫源、火山等)的环境中，会有腐蚀的风险。当距离小于100m 时，不建议安装组件；当距离在100m～1km之间时，建议安装具有防盐雾功能的组件。必须采用不锈钢或者铝材料来与光伏组件接触，并且对安装部位做好防锈蚀的处理。当组件安装在距海不到1km的陆地上或年降雨小时数/年总小时数超过25% 的区域时，连接器上建议安装防水冷缩管，以防止连接器进水和腐蚀；冷缩管材质建议采用硅橡胶。

Table 5-2 Photovoltaic module connector accessories

表5-2 光伏组件连接器配件

受控文本 Controlled Copy

Procedure 步骤	Method 方法	Explanatory Chart 图示
①	After unplugging the photovoltaic connector, take either end and cover the cold shrinkable tube to the connector in the direction shown on the right. 将光伏连接器拔开后，取任意一头，将冷缩管按右图方向套到连接器上。	
②	Slide the cold shrinkable tube over the head of the connecting head and expose the head. 将冷缩管套过连接头头部，露出头部。	
③	Connect the positive and negative connectors in the correct way. 按照正确方式连接连接器正负极。	
④	Move the connection to the middle of the cold shrinkable tube. 将连接接口处移至冷缩管中部位置。	
⑤	Pull the inner ring exposed in the cold shrinkable tube by hand, rotate and pull it out again and again until the inner ring is completely pulled out. 用手拉动冷缩管中露出的内圈条，一遍旋转一遍向外拉出，直至内圈完全拉出。	
⑥	The cold shrinkable tube has completely cold shrinkable seal connectors. 冷缩管已完全冷缩密封连接器。	

•Notes for installation of cold shrinkable pipe

冷缩管安装及注意事项：

①Before installation, make sure that there is no sand, water, sharp objects and other sundries inside the cold shrinkable tube;

安装前确保冷缩管内部没有沙子，水珠，尖锐物体等杂物；

②It is forbidden to tie the label on the shrink tube to prevent the tie from scratching the shrink;

禁止把标识牌绑扎在冷缩管上，防止扎带划伤冷缩管；

③Pay attention to environmental protection on site (handling of support strips/instructions/packaging bags);

注意现场环保（支撑条/说明书/包装袋的处理）；

④There are no cracks or gaps at both ends of the cold shrinkable tube and no cracks on the surface;

冷缩管两端没有裂口，缝隙，表面无裂孔；

⑤The cold shrinkable tube should be affixed to the connector and cable in a natural way, and no wrinkle or

bulge is allowed;

冷缩管平顺自然的收受贴服在连接器及线缆上，禁止有褶皱和凸起；

受控文本 Controlled Copy

According to IEC62716 "Ammonia corrosion testing of photovoltaic (PV) modules", ZNSHINE SOLAR modules can be safely installed in ammonia-heavy environments, such as farm, meadow and so on. IEC62716. "光伏（PV）组件的氨腐蚀试验"的结果表明，正信光电太阳能组件可以安全地安装在像农场、牧场等氨气较重的环境中。

According to the surrounding environment of the project, use the appropriate protective measures to ensure the safety of the module installation and reliable. For example, it needs to have around the windproof measures like design of windbreaks in strong wind area. 根据项目地的周围环境，采用合适的保护措施确保组件安装的载荷可靠和安全，如强风区域，周围需要有防风措施如设计防风林。

The system design needs to have the lightning protection function, it must pay more attention especially in the installation ground where are more lightning strike. 系统设计需要有防雷击功能，特别是在安装地有较多雷击，一定要更加重视。

When installing modules for a rooftop application, it is necessary to consider the overall fire rating of the final structure. At the same time, it is also important to consider the overall maintenance in the future. The roofing PV system shall be installed after being evaluated by construction experts or engineers and with official analysis results for the entire structure. It shall be proved capable of supporting extra weight of system racking structures and PV modules. 当组件安装在屋顶上应用时，需要考虑最终结构的整体防火等级。同时，亦需要考虑后期的整体维护。安装光伏系统的屋顶必须经过建设专家或工程师评估，有正式的完整结构分析结果，并被证实能够承受额外的系统支架压力，包括光伏组件自身重量。

When installing PV modules on a roof, the roof must be covered with a layer of fireproof material applicable to this class, and adequate ventilation must be ensured between the back of the module and the installation surface. A safe working area also must be left between the edge of the roof and the external edge of the solar array. The structure of the roof and different installation will affect the fire safety performance of the building. If not properly installed, it may cause fire. 当在屋顶上安装太阳能组件时，屋顶上必须要覆盖有一层适用于该等级的防火材料，并且保证组件背面和安装面之间充分的通风，要在屋顶边缘和太阳能阵列的外边缘之间留出安全的工作区域。屋顶的结构和安装方式不同会影响建筑的防火安全性能。如果安装不恰当，可能会酿成火灾。

In the case of residential installations on the ground, modules must be installed following local regulations, e.g. using fence. 如果住宅设施在地面上，组件的安装应按照当地法规进行，例如安装中需要用到围栏。

受控文本 Controlled Copy

5.3. TILT ANGLE OF INSTALLATION 光伏组件安装倾角

The installation of PV module string should be in the same orientation and the same installation angle. Different installation directions and installation angles will lead to the mismatches in current and voltage which is caused by different light absorption of different PV modules, this mismatch will cause the PV system power output loss. 太阳能光伏组件串的安装应该保持同一方位和同一安装角度。不同的安装方位和安装倾角会导致不同的光伏组件串吸收光线总量存在差异而导致的产生的电流和电压不匹配，从而降低系统运行效率，造成功率输出损失。

The largest power will be generated When direct sunlight on solar PV module. For modules which are installed on the fixed brackets, the best installation angle should be selected to ensure the maximum power output can be generated at winter time, if the angle can guarantee enough power output during the winter, it will make the whole solar PV system in the rest of the year can have enough power output also. 当阳光直射到太阳能光伏组件上时产生的功率最大，对于那些安装在固定支架上的太阳能光伏组件，选择最佳的安装倾角时应考虑冬季的太阳能光伏组件的功率产出，如果该角度能保证光伏组件在冬季有足够的功率输出，那将会使整个太阳能光伏组件体系在一年中的余下时间里也能有足够的功率产出。

Solar modules are recommended to be installed at an optimized tilt angle to maximize the energy output. For detailed information on the best installation angle, please refer to standard solar photovoltaic installation guides or consult a reputable solar installer or systems integrator. Dust building up on the surface of the modules can impair module performance. ZNSHINE SOLAR recommends installing the modules with a tilt angle of at least 10°, making it easier for dust to be washed off by rain. This reduces the number of cleaning cycles for photovoltaic modules, while also facilitating the flow of accumulated water on the surface of the modules, avoiding long-term accumulation of water leaving traces on the glass, thereby affecting the appearance and performance of the modules. Any faults caused by and/or attributable to tilt angle less than 10 degrees are not covered by manufacturer's warranty. It is roughly equal to the latitude of the project site as a rule of thumb, facing toward the equator. Optimized system designs must incorporate other local requirements. 建议通过优化的倾斜角安装太阳能组件以达到能量输出最大化。对于详细的安装角度，请依据标准组件安装指南或者有经验的光伏组件安装商给出的建议。组件表面积聚的灰尘可能会损害组件的性能。正信光电建议组件安装的时候安装夹角不小于10°，这样组件在下雨时表面灰尘容易被雨水带走，从而减少组件清洗次数，同时利于组件表面的积水流走，避免长期大量积水在玻璃上留下痕迹，进而影响组件外观性能。任何由倾斜角度小于10°引起的故障不包括在制造商的保修范围内。一般来说它大致等同于项目所在地的纬度，面向赤道方向。但在实际设计中还是按照当地具体情况设计并找出最佳倾斜角。

Installation inclination refers to the Angle between the module and the ground plane, as shown in Figure 5-1. 安装倾角是指太阳能光伏组件与水平面之间的角度，如图5-1所示。

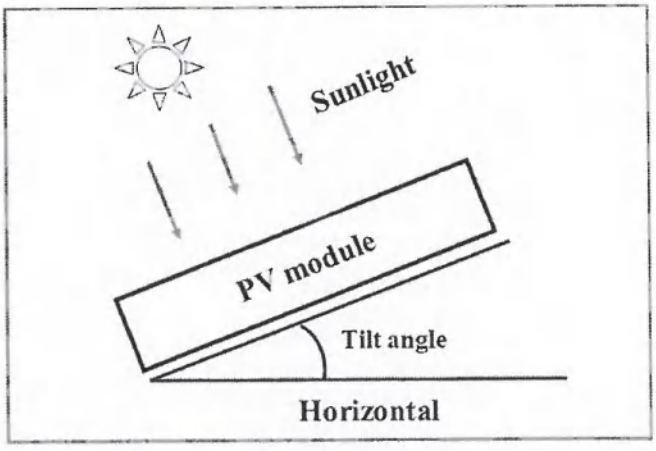

Fig. 5-1 Tilt angle
图5-1 安装倾角示意图

受控文本 Controlled Copy

Table 5-3 Recommended tilt angle for fixed systems

表5-3 固定系统安装时建议的安装倾角

安装地所处纬度 Latitude	安装倾角 Tilt angle
0°~15°	15°
15°~25°	The same latitude 同安装地所处纬度
25°~30°	Same latitude +5° 安装地所处纬度+5°
30°~35°	Same latitude +10° 安装地所处纬度+10°
35°~40°	Same latitude +15° 安装地所处纬度+15°
40°+	Same latitude +20° 安装地所处纬度+20°

5.4. INSTALLATION REQUIREMENTS FOR BIFACIAL CELLS MODULE 双面电池组件安装要求

受控文本 Controlled Copy

Under the certain installation conditions, the backside of bifacial cells module will also generate electricity power after receiving the reflected light, which will bring additional power generation gain to the power station system. 双面电池组件在一定的安装条件下，背面接受到反射光后也会发电，会给电站系统带来额外的发电增益。

The shading on the module surface will affect the power generation much, the module should be installed in the place where the module cannot be shadowed totally (such as the shadow from building, chimney and tree etc.), and even the partially shading (such as the dirt, snow and aerial wire etc.) should be avoided. 组件应在整年完全不被（阴影）遮挡（例如，通过建筑、烟囱、树），即便部分（阴影）遮挡（例如，通过架空线、污垢、雪、背面支架）也应避免。

The generation gain is related to the ground reflectivity, the module installation height to the ground, the array spacing and the shadow shading to the module backside. 发电量增益和地面反射率、组件离地高度、阵列间距和背面阴影遮挡有关。

Generally speaking, the reflectance is various with the different ground (See table 5-4), and this will lead to different power generation gain. 一般来说，不同的地面其反射率是不一样的，由此带来的组件发电增益也不同。如表5-4 所示。

Table 5-4 reflectivity of different surfaces

表5-4 不同地面的反射率

The ground type 地面类型	Water 水面	Grassland 草地	Ground 土地	Concrete 混凝土	Sand 沙地	Snow 雪地
Reflectivity range（%） 反射率范围	5-12	12-25	20-33	20-40	20-40	80-85

Due to the different ground clearance height will affect the power generation gain, it is recommended to install the module at a height from 1m to 2m. See Fig. 5-2. 不同离地高度也会影响双面电池组件发电量的增益，一般建议安装高度为1m～2m比较合适。如图5-2所示。

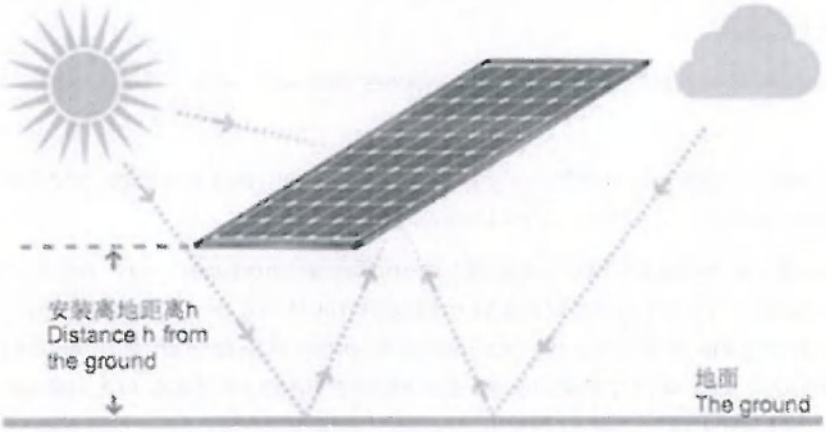

Fig. 5-2 Distance from the earth

图5-2 双面电池组件安装离地

In the system design, besides the ground type and the module installation height to ground, the proper array spacing and how to avoid shadow shading on the back need to be considered too, please consult with the professional system designer. 在进行系统设计时，除了地面类型和离地高度以外，合适的阵列间距与如何避免背面阴影遮挡都需要考虑，请咨询专业系统设计人员。

5.5. INSTALLATION METHOD 安装方法

受控文本 Controlled Copy

5.5.1. MECHANICAL INSTALLATION AND WARNING 机械安装及注意事项

PV modules can be installed through bolt method and clamp method. The modules must be installed according to the following examples and recommendations. If a different installation method is desired, please contact ZNSHINE SOLAR customer service or technical support team for consultation. Improperly mounted modules maybe damaged. If alternative mounting method is used that has not been approved by ZNSHINE SOLAR, the modules will not continue to carry a valid warranty. 光伏组件的固定和安装可以采用螺栓固定方式和压块固定方式。安装组件必须依照下面示例和建议进行，如果安装方式与正信公示不同，请咨询正信光电技术支持或售后，并取得正信同意，否则会损坏组件并导致质保失效。

Modules shall not be subjected to wind or snow loads which is exceeding the maximum permissible designed loads, and shall not be subjected to excessive forces due to the thermal expansion of the support structures. The selection and design of mounting bracket shall be carried out by professional system engineers after the load calculation according to the climatic conditions of the installation site. Ensure the installation method and supporting system of modules is strong enough to withstand all the load conditions. The Installer must provide this guarantee. The installation supporting system must be tested by the third-party organization with the analysis ability of Static Mechanical, according to the local national or international standards. 系统设计过程中光伏组件不应承受任何超出最大设计载荷的负荷（如风和雪载荷），同时不应该承受因支架结构的热膨胀而产生的过大的力。根据安装地气候条件由专业系统工程师进行载荷计算，然后对安装支架进行选择和设计。确保组件安装方式和支架系统足够坚固,使得组件能够承受所有预定的载荷条件，这是支架安装商所必须要提供的保证。安装支架系统必须经过有静态力学分析能力的第三方测试机构进行检验和测试,采用当地国家或国际标准。

The modules shall be mounted on continuous rails that extend beneath the modules. If modules are mounted without continuous rails, the maximum allowable load will be reduced , which needs to be re-evaluated by ZNSHINE SOLAR. 所描述的组件被安装在组件下方延伸的连续支架上。如果组件被安装在没有连续的支架的情况下，其最大允许载荷将会减少，需由正信光电重新进行评审。

Please ensure that the modules with the same color cells to be installed together. 在组件安装过程中，建议使用相同色系的组件安装在一起。

Do not use the module to replace or partly replace roofs and walls of buildings. 组件禁止用于替代或部分替代屋顶及墙体材料。

A clearance of at least 115mm (recommended) is provided between modules and the surface of the wall or roof. 建议在组件和墙面或屋顶表面之间留有至少115mm的间隙。

The minimum clearance between two adjacent **monofacial modules** must not be less than 10mm. The minimum clearance between two adjacent **bifacial modules** must not be less than 20mm. The proper gap can protect against jarring during the neighbouring modules due to the size tolerance or expansion and contraction of modules it also can reduce the wind pressure on the square array. If there are special requirements, please confirm with ZNSHINE SOLAR and install it. 两块相邻单面发电组件之间的最小间隙≥10mm，两块相邻双面发电组件之间的最小间隙≥20mm，合适的空隙不仅可以防止相邻两块组件由于公差或热胀冷缩而相互挤压，还可以减少方阵面上的风压。如果有特殊要求，请跟正信光电确认后进行安装。

ZNSHINE SOLAR's limited warranty will be invalid for the failure of PV modules caused by the use of unsuitable accessories or incorrect installation methods. 针对使用不适合的配件或不正确的安装方式造成的组件故障，正信光电有限质保将会无效。

The module frame drain holes cannot be blocked in any situation during installation or use. 安装或使用过程中，排水孔在任何情况下都不能堵塞。

Always keep the back of the PV module from coming into contact with foreign bodies or support components, which may damage the module when it is subjected to mechanical load. 始终保持组件背部不会接触到异物或支架部件，组件承受机械负载时它们可能会破坏组件。

受控文本 Controlled Copy

The module frames will warp at low temperature. Avoid the frame receiving the lateral tension and pressure, causing the frame off or crushing the glass. 组件边框在低温下会有翘曲变形，应避免边框受到侧向拉力和压力，避免边框脱开或挤碎玻璃。

The mounting method must not result in the direct contact of dissimilar metals with the aluminum frame of the Module as it will result in galvanic corrosion. IEC 60950-1 standard recommends metal combinations not exceed an electrochemical potential difference of 0.6V. 组件安装方法不能导致组件的铝边框与不同种金属之间发生电化学腐蚀。IEC60950-1标准建议相接触的金属电化学电势差不能超过0.6V。

To maximize mounting longevity, ZNSHINE SOLAR strongly recommends the use of corrosion proof (stainless steel) attachment hardware. 为最大程度的延长安装寿命，正信光电建议使用防腐蚀（不锈钢）固件。

When selecting ZHSHINE's B-side 30 mm height frame module, it is recommended to select fasteners with overall length ≤ 25mm. 选用正信B面30 mm高度边框组件时，建议选择整体长度≤ 25mm长度紧固件。

Secure the module in each mounting location with an M8 bolt (full thread recommended)and a flat washer, spring washer and nut and tighten to a torque of 16~20 N.m. The yield strength of bolt and nut should not be less than 450 MPa. The tightening step is as follows: 使用M8螺栓(建议全螺纹)、平垫圈、弹簧垫圈和螺母在每个固定位置固定组件，并拧紧至16～20 N.m 的扭矩。螺栓和螺母的屈服强度应不小于450MPa。拧紧步骤如下：

a. Use torque wrench to tighten nut to target torque: 16~20N.m;

使用扭矩扳手拧紧螺母至目标扭矩：16~20N·m；

b. Nut loosen 90~180 degrees;

螺母反松90~180°；

c. Finally tighten the nut to the target torque and reduce the torque attenuation.

最终拧紧螺母至目标扭矩，降低扭矩衰减。

All parts in contact with the modules should use flat stainless steel washers of minimum 1.5mm thickness with an outer diameter of 16-20mm. (Except for Single-axis tracking system) 组件连接的所有部位应采用最小厚度为1.5mm且外径为16-20mm的扁平不锈钢垫圈。

The installation method listed below are for your reference only, the PV system installer or the trained professionals should take the responsibility of the PV system design, mechanical load calculation, install, maintenance and safety, ZNSHINE SOLAR will not supply the related material for system installation. 以下列出的安装方法仅供参考，系统安装商或经过训练的专业人士必须要对光伏系统的设计，机械载荷计算、安装、保养和安全负责，正信光电不提供相关的安装材料。

Tools: screwdriver, wrench, stainless steel screw/bolt, clamp, nut and spring washer, plain washer.

安装工具：螺丝刀、扳手、不锈钢螺丝/螺栓、压块、螺帽和弹簧垫圈、平垫圈。

A. Mounting with Bolts 4-φ9*14mm mounting holes 使用4个φ9*14mm安装孔安装

Modules can be attached using the mounting holes 4-φ9*14mm on the back of the module frame, by fixing the module to the support rails with bolts. The mounting details are shown in the following figures. 通过组件背面边框上的4个φ9*14mm 安装孔，使用螺栓把组件固定在支架上，安装细节下图所示。

受控文本 Controlled Copy

The frame of each module has 8-φ9*14mm mounting holes, ideally placed to optimize the load handling capability, to secure the modules to the supporting structure. The middle four mounting holes are used for normal installation, as shown in Figure 5-3. It is recommended that you put the PV module vertically when you use the bolt to fix it, so that the module will not slide easily and use more safely. 每个组件的边框上都有8个φ9*14mm 的安装孔，通过这些安装孔可以很好地将组件固定到支撑结构上以优化其负载承受能力，中间4个安装孔用于常规安装，如图5-3所示。建议您采用螺栓固定时竖放太阳能光伏组件，这样组件将不易滑落，使用更加安全。

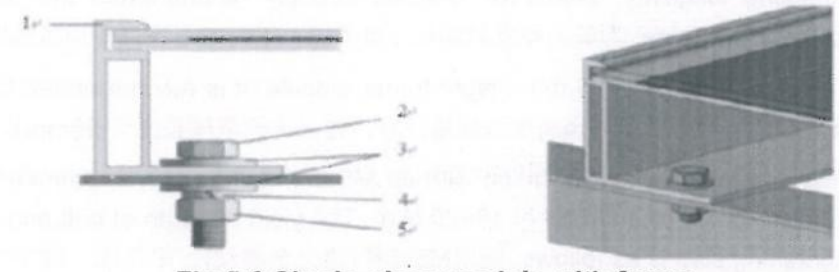

Fig.5-3 Single-glass module with frame
图 5-3 有框单玻组件安装图示

1.aluminum frame铝边框　2.M8 hex bolt M8六角螺栓　3.flat stainless washer平垫片
4.spring stainless washer弹垫片　5.hex stainless nut六角螺母

Module 组件	Test Load 测试载荷	Mounting Direction 安装图
Length≤2500mm	背面载荷 ≤2400Pa 正面载荷 ≤5400Pa Uplift load ≤2400Pa Downforce load ≤5400Pa	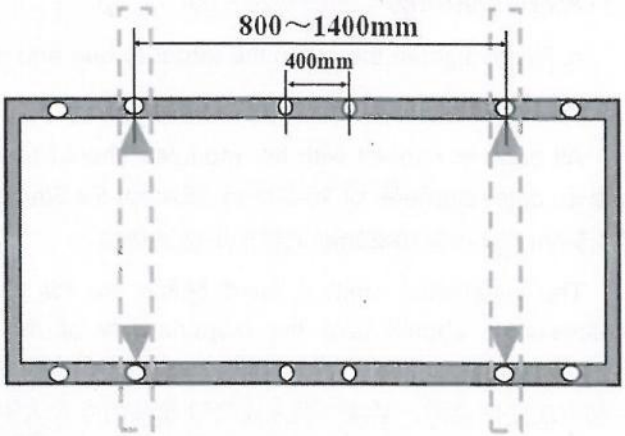
2300＜Length≤2400mm	背面载荷 ≤2400Pa 正面载荷 ≤3600Pa Uplift load ≤2400Pa Downforce load ≤3600Pa	***NOTE:** 1. The crossbeam is perpendicular to the long side frame. 横梁与组件长边垂直。 2. Need two support rails below the PV module to make sure the Mechanical load. 光伏组件下方需要两根支撑轨，以满足所列载荷。 3. The load is an empirical value of a standard module based on a standard installation mode, and the specific information shall be consulted by ZNSHINE SOLAR. 所述载荷为标准组件基于标准安装方式下的经验值，具体信息还需咨询正信光电。

受控文本 Controlled Copy

B. Mounting with Clamps 夹具安装

ZNSHINE SOLAR has tested its modules with a number of clamps from different manufacturers, it is recommended to use fixing bolt of at least M8. It is recommended to use a clamp with length of ≥60mm and thickness of ≥4mm, aluminum alloy 6005-T6. The clamp shall not be malfunctioned due to deformation or corrosion during the loading process. If the customer needs a different size of clamps, it should be fully evaluated and approved by ZNSHINE SOLAR. 正信光电在用多家制造商的不同夹具测试过其组件后，建议使用至少可以固定M8螺栓的夹具。建议夹具长度≥60mm，厚度≥4mm，材质6005-T6。务必确保在组件整体受载过程中，夹具不会因变形或腐蚀失效。如果客户需要其他尺寸的压块，需由正信光电进行充分评估。

The clamp must overlap the module frame by at least 8mm but no more than 12mm. 夹具必须与组件边框保持至少 8mm但不超过 12mm的重叠部分。

For installation where mounting rails run parallel to the frame, the frame must overlap the rails completely. 对于安装导轨平行于组件边框的安装方式，请确保组件边框与导轨全部重叠。

Use at least 4 clamps to attach modules to the mounting rails. 至少使用 4 个夹具将组件固定在安装导轨上。

Modules clamps should not come into contact with the front glass and must not deform the frame. 组件夹具不能和前侧的玻璃接触，且不得使边框变形。

The clamps shall not to be out the edge of the module under any circumstances. Be sure to avoid shadowing effects on the solar cells from the module clamps. 任何情况下夹具不得超出组件边缘，请务必避免组件夹具的遮光效应。

The module frame is not to be modified under any circumstances. 组件边框在任何情况下都不能被改装。

When choosing this type of clamp-mounting method, use at least four clamps on each module, two clamps should be attached on each long sides of the module (for portrait orientation) Depending on local wind and snow loads, additional clamps may be required to ensure that modules can bear the load. 当选择这种类型的夹具安装方法时，每个组件上至少需要使用四个夹具。在组件的每个长边（纵向）上各安装两个夹具。视当地的风雪气象情况确定是否需要额外的夹具以确保组件能承受负载。

Applied torque should refer to mechanical design standard according to the bolt customer is using, ex: M8 16-20N.m. 施加的扭矩应按照客户所用螺栓的机械设计标准来定，例如：M8 16～20N.m。

Clamp positions are of crucial importance for the reliability of the installation. The clamp centerlines must only be positioned within the ranges indicated in table below, depending on the configurations and loads. 夹具的位置对安装的可靠性很重要，根据不同的载荷量与安装方式，夹具中心线必须处于下表所示的许可范围内。

When there are high load requirements or modules with composite frames, it is recommended to use clamps with enhanced functionality, such as hooked clamps or Arc-shaped clamps. 有高载荷要求或者使用边框为复合材料的组件时，建议采用具有加强功能的压块，例如带钩压块或弧形压块。

受控文本 Controlled Copy

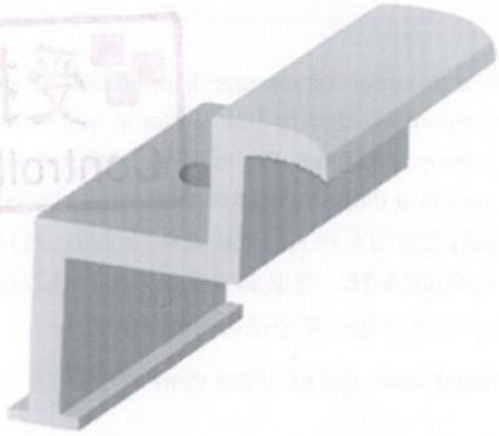



Arc-shaped Clamp
弧形夹具

Clamp Type 夹具类型	Conventional Clamp 常规夹具	Arc-shaped Clamp 弧形夹具
End Clamp 边夹具	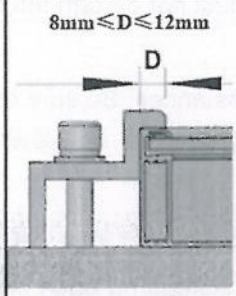 	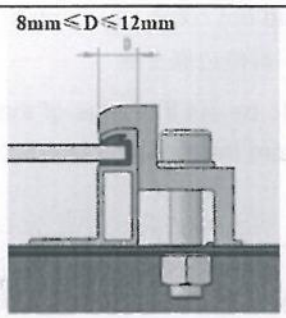 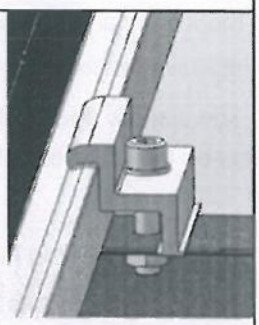
Middle Clamp 中夹具	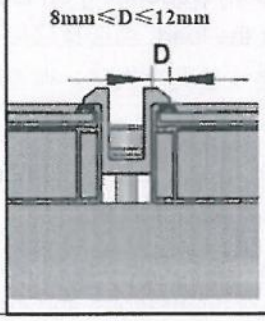 	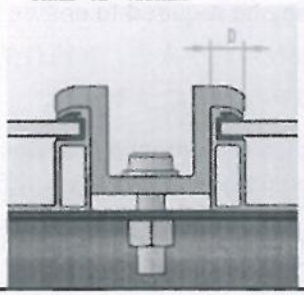 

It is recommended to use arc-shaped clamp for installation of Very large module, and use arc-shaped cross section clamp to make the pressing surface of the clamp better fit with the module, so that the installation is more reliable and stable. If you use conventional clamp for installation, in harsh environments such as blizzards or strong winds, the modules may have a large amount of deformation, resulting in the inability to fasten the modules better, resulting in the modules falling, resulting in damage to the modules, and you will not be able to enjoy the warranty. Detailed information of arc-shaped clamp can consult ZNSHINE SOLAR technical team. **(Definition of oversized PV modules: modules with a length of ≥ 2300mm)** 超大尺寸组件正信光电建议使用弧形压块，使用弧形截面压块安装，使压块的压合面能更好的与组件贴合，使安装更可靠稳定。若使用常规压块安装，在暴雪或大风等恶劣环境下，组件可能产生较大的形变量，导致无法更好地紧固组件，致使组件掉落，因此造成组件破损，将无法享受质保。弧形压块详细资料可咨询正信光电技术团队。**（超大尺寸组件定义：长度≥2300mm的组件）**

受控文本
Controlled Copy

<table>
<tr><th>Module
组件</th><th>Test Load
测试载荷</th><th>Mounting Direction
安装图</th></tr>
<tr><td>组件长度小于2300mm
组件B面高度≥30mm
Length≤2300mm
B side height ≥30mm</td><td>背面载荷 ≤2400Pa
正面载荷 ≤5400Pa

Uplift load ≤2400Pa
Downforce load ≤5400Pa</td><td rowspan="2">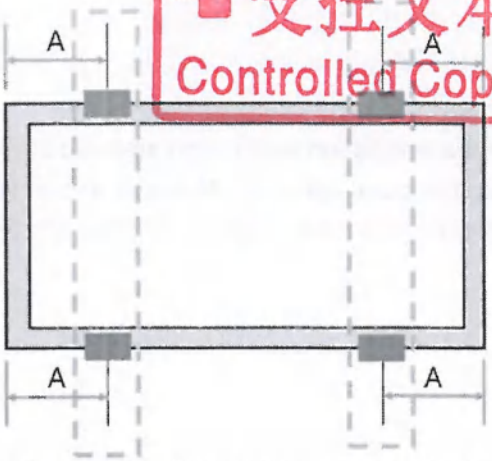

L≤1900mm： A=1/4L±50mm；C=10±2mm
1900＜Length≤2500mm： 1/5L≤A≤1/4L
L=Module length
*NOTE:
1. The crossbeam is perpendicular to the long side frame.
横梁与组件长边垂直
2. The above-described distance is from the module edge to the middle of the clamp. Clamps length ≥60mm.
所述距离为组件边缘到夹具中心的距离。夹具长度≥60mm
3. Need two support rails below the PV module to make sure the Mechanical load.
组件下面需要两个支撑轨，以确保机械载荷。
4. The load is an empirical value of a standard module based on a standard installation mode, and the specific information shall be consulted by ZNSHINE SOLAR.
所述载荷为标准组件基于标准安装方式下的经验值，
具体信息还需咨询正信光电。</td></tr>
<tr><td>2300＜组件长度≤2500mm
组件B面高度≥30mm
2300＜Length≤2500mm
B side height ≥30mm</td><td>背面载荷 ≤2400Pa
正面载荷 ≤3600Pa

Uplift load ≤2400Pa
Downforce load ≤3600Pa</td></tr>
</table>

***NOTES:**

ZNSHINE SOLAR does not recommend short side installation. When the short side is installed, the support point of the module is far away. Under the weight of the module or the action of a small load, there will be a slight deformation in the middle of the module, which is elastic deformation. After the module is removed or the load is removed, it can be restored to its original state without causing the battery crack and power attenuation, However, it is easy to increase the amount of ash, which requires frequent cleaning of the surface of modules. 正信光电不建议组件使用短边压块安装。短边安装时，组件支撑点距离较远，在组件自重或较小载荷作用下，组件中部会有轻微变形，此为弹性变形，组件取下或去除载荷后即可恢复原样，不会产生电池片隐裂和功率衰减，但是容易增加积灰量，需要频繁清洗组件表面的积灰。

The load is an empirical value of a standard module based on a standard installation mode, and the specific information shall be consulted by ZNSHINE SOLAR. 所述载荷为标准组件基于标准安装方式下的经验值，具体信息还需咨询正信光电。

In severe environment such as snowstorm, when the modules are subjected to heavy snow load, the central part will produce large shape variables, which will affect the appearance of the modules. In the process of module deformation, if the junction box or glass is in contact with the obstacles below, the glass on the back will

produce a large stress, and the module will have the risk of rupture. The distance between the obstacles below the module and the junction box or glass is required to be more than 120mm by day rise. 在暴雪等恶劣环境下，组件承受极大积雪载荷时，中部会产生较大形变量，影响组件外观。在组件形变过程中，接线盒或玻璃若与下方障碍物接触，背面玻璃处会产生较大应力，组件有破裂风险，正信光电要求组件下方障碍物与接线盒或玻璃距离≥120mm。

受控文本 Controlled Copy

If the installation method is parallel to the module frame, ensure that the module frame and the module frame overlap the guide rail or X≥20mm as shown in the following figure. 对于与安装导轨平行于组件边框的安装方式，请确保组件边框与导轨全部重叠或下图中X值≥20mm。

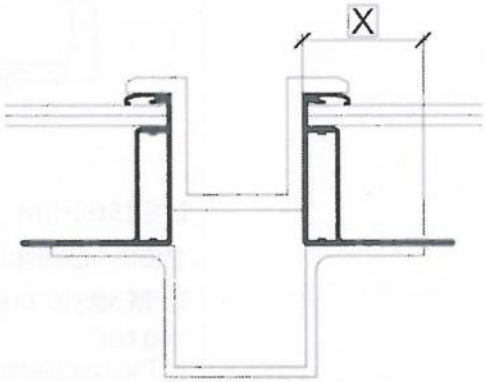

When installing with short side pressing block, load calculation and support structure design shall be carried out by professional structural engineers according to the project climate conditions, and foreign bodies under the positive projection of the module glass shall be avoided. The appearance caused by dead weight or other loads shall not be considered as defects and shall not be within the scope of warranty. 在使用短边压块安装时，需根据项目地气候条件由专业结构工程师进行载荷计算和支架结构设计，且避免组件玻璃正投影下方有异物，因自重或其他载荷引起的外观情况，不认定为缺陷，不在质保范围内。

Other mounting configurations can be used. However, failure to comply with the above recommendations will result in a lowering of the load handling capabilities below the empirical value, and product failure as a result of an overload situation will not be covered by the ZNSHINE SOLAR warranty. 可以使用其他安装配置，但不遵守上述建议将会导致组件载荷能力低于经验值，产品因过载失败不会享受正信光电质保。

5.5.2 ELECTRICAL INSTALLATION 电气安装

受控文本 Controlled Copy

1. Cable layout 布线方式

The recommended vertical installation connection methods for module with split J-Box are as follows (The extension cable is required). 推荐竖装连线方案示意图如下（需要延长电缆线）。

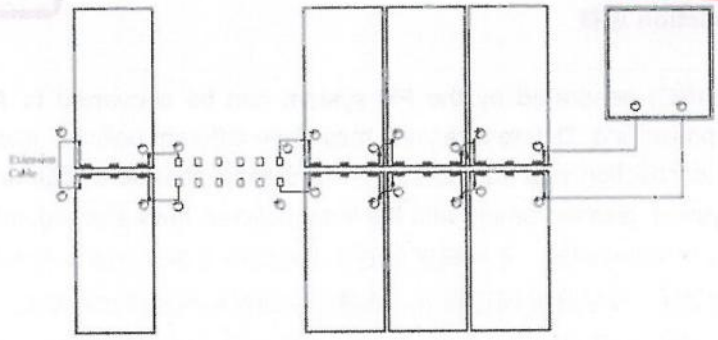

Fig. 5-4 Split J-Box at module side position for vertical direction

图5-4 接线盒在边缘的垂直安装方式

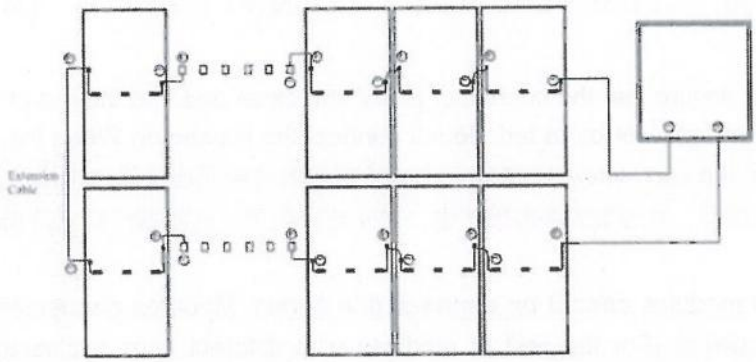

Fig. 5-5 Split J-Box at module middle position for vertical direction

图5-5 接线盒在中间的垂直安装方式

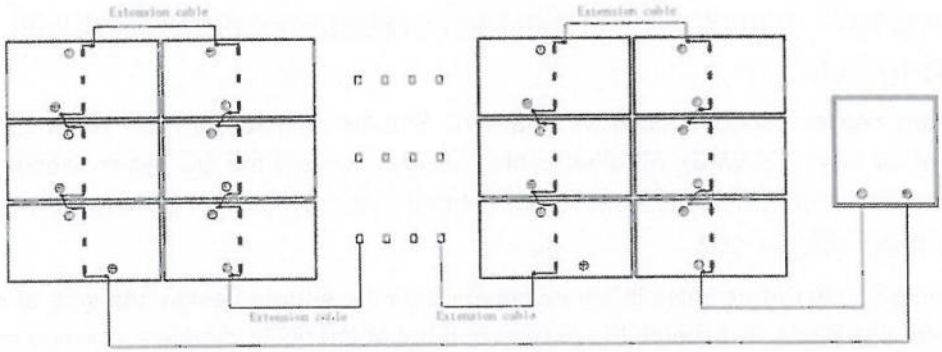

Fig. 5-6 Split J-Box at module middle position for horizontal direction

图5-6 接线盒在中间的水平安装方式

Precautions: To minimize risk in the event of an indirect lightning strike, avoid forming loops when designing the system. In order to avoid bad or damaged connection of the cable and connector, the cable and junction box caused by human factors, affecting the electrical safety or service life of the product, it is recommended that the force applied between the cable and connector, cable and junction box shall not be greater than 60N during the installation, dismantling, maintenance and any other related process of the Product.

安装需注意事项：为了将间接雷击的风险降到最低，在设计系统时应避免形成回路。为避免人为因素造成线缆

与连接器、线缆与接线盒连接不良或损坏，影响产品电气安全或使用寿命，建议产品在安装、拆卸、维护及任何其它相关过程中，施加在线缆和连接器、线缆和接线盒之间的作用力不得大于60N。

受控文本 Controlled Copy

Pay attention to the direction of the wire when installing the modules. It should be connected along the wire direction to avoid bending the wire. 注意组件安装时的导线方向，应顺着导线方向连接，避免导线折弯。

2. Electrical Connection 连接

The Direct Current (DC) generated by the PV system can be converted to Alternating Current (AC) and connected to the public power grid. Different regions may have different policies, laws and regulations to stipulate the installation and grid-connection requirements of PV systems. Therefore, during the design, installation, and grid-connection of PV system, please comply with the local policies, laws and regulations. 光伏系统产生的直流电可以转换成交流电，并与公共电网相连。不同地区可能有不同的政策和法律法规来规定光伏系统的安装要求和并网要求，因此在光伏系统的设计、安装和并网过程中，请遵守当地政策和法律法规要求。

PV modules can obtain different current and voltage outputs through series connection and parallel connection. Read this installation manual carefully before electrical connection and installation. Please design and connect according to the current and voltage required by customers. 光伏组件通过串联和并联的连接方式可以获得不同的电流和电压输出，在进行电气连接和安装前，请仔细阅读本安装说明书，并依据客户所要求的电流和电压进行设计和连线。

Before connecting, ensure that the connector is dry and clean and that the nut of the connector is tight. If the connector is wet, contaminated, or corroded, do not connect the connector. When the connector is not connected positively or negatively, the connector is not waterproof.连接前请确保连接器的干燥、清洁和连接器的螺帽是处于紧固状态，若连接器为潮湿、被污染或者腐蚀状态，禁止连接使用。连接器没有正负相连时，连接器是不具有防水功能的。

Different types of modules cannot be connected in series. Modules connected in series should ensure the consistency of their current (For the rest of modules with different current classes, the modules with adjacent current class can be installed in one given string.). The voltage of the module string should not exceed the allowable system voltage value, which can be found on the nameplate or datasheet of the module. 不同类型的组件产品不能串联在一起，串联在一起的组件产品要保证其电流的一致性（关于尾装的不同电流分档的组件，相邻电流分档的可安装在一个组串内。）。组件串的电压不能超过所允许的组件系统电压值，该电压值可以在组件的铭牌或者规格书里找到。

The standard copper cables applied in ZNSHINE SOLAR modules are UV resistant and with a cross-sectional area of ≥4 mm² (12 AWG). All other cables used to connect the DC system should have a similar (or better) specification. 正信光电的光伏组件采用截面积≥4mm² 且防紫外的光伏专用电缆。用于连接直流系统的所有其他电缆应具有相似（或更高）规格。

The maximum number of modules in series depends on the system design, the type of converter used and the environmental conditions. In general, the maximum number (N) of PV modules in series can be calculated by dividing the maximum system voltage by the open circuit voltage of the relevant solar PV modules. When designing the solar PV system, it is necessary to take into account the characteristic that the voltage of the solar PV module changes with the temperature. Considering the voltage increase caused by temperature drop in extreme environment in winter, the maximum series connection number of solar PV modules can be calculated by the following formula. 串联组件的最大数目取决于系统设计、所用变频器的类型和环境条件。通常情况下，最大的串联太阳能光伏组件数量（N）可以通过系统最大电压除以相关太阳能光伏组件开路电压的方式计算而获得，但是在设计太阳能光伏系统时，一定要考虑到太阳能光伏组件的电压随着温度变化而变化的特性。考虑到冬季里极端环境下温度下降造成的电压升高，太阳能光伏组件最大串联数量可以使用以下公式计算：

Table 5-5 maximum series connection number calculation

Table 5-5 串联最大数量计算

受控文本 Controlled Copy

Formula 公式	Maximum system voltage $V \geq N*V_{oc}*[1+\beta*(T_{min}-25)]$ 最大系统电压$V \geq N*V_{oc}*[1+\beta*(T_{min}-25)]$
V	Maximum system voltage 最大系统电压
N	The number of maximum solar PV modules in series 能串联在一起的组件的最大数量
V_{oc}	The open circuit voltage of each module (see product label or datasheet) STC 条件下组件的开路电压（可以查看组件的标签或者规格书）
β	Temperature coefficient of open circuit voltage of the module (refer to datasheet) 组件的开路电压的温度系数（请参考组件的规格书）
T_{min}	The lowest ambient temperature at installation site 组件安装地的最低环境温度

The number of modules that can be connected shall be determined by a qualified institution or person in accordance with the design specifications of the photovoltaic system and the local electrical design specifications. The calculation formula recommended by ZNSHINE SOLAR shall be for reference only. 具体所能连接的组件数量，应按照安装地的光伏系统设计规范、电气设计规范，由具备设计资质的机构或人员确定，正信光电所建议的计算公式仅供参考。

If the modules are allowed to be installed in parallel electrically, each module (or series string of modules so connected) shall be provided with the maximum series fuse as specified. For applications requiring high currents, several photovoltaic modules can be connected in parallel; the total current is equal to the sum of individual currents, each module (or series string of modules so connected) shall be provided with the maximum series fuse as specified. The recommended number of modules in parallel is only one. The modules' electrical performance in a system is the same. When connected in series, all modules must have the same amperage. When connected in parallel, the modules must all have the same voltage. Connect the quantity of modules that match the voltage specifications of the devices used in the system. The modules must not be connected together to create a voltage that is higher than the permitted system voltage. 如果允许组件并联安装，则每个组件(或串联的组件串)应按规定配置最大串联保险丝。对于需要大电流的应用，多个光伏组件可以并联；总电流等于各电流之和，每个组件(或串联的组件串)应按规定配置最大串联保险丝。推荐的组件并联数只有一个。组件在系统中的电气性能是相同的。串联时，所有组件必须具有相同的安培数。当并联时，所有组件必须具有相同的电压。连接组件的数量与系统中使用的设备的电压规格相匹配。组件不能连接在一起以产生高于允许的系统电压的电压。

Product can be irreparably damaged if an array string is connected in reverse polarity to another. Always verify the voltage and polarity of each individual string before making a parallel connection. If you measure a reversed polarity or a difference of more than 10V between strings then check the string configuration before making the connection. 如果一组阵列以相反极性连接到另一个，则会对产品造成无法修复的损坏。在进行并联之前，请务必确认各列的电压和极性。如果测量发现各列之间的极性相反或电压差值大于10V，则在进行连接之前检查其结构配置。

Before wiring the module, ensure that the contact points are corrosion resistant, clean, and dry; If a string of modules is reversed, irreparable damage can be caused. 在组件布线之前，请确保接触点是耐腐蚀、清洁和干燥的；如果一个组件串正负极反接，可能会造成无法弥补的损害。

During field wiring, only single-wire photovoltaic special copper cables with minimum temperature resistance of 90 ℃, sunlight resistance (UV) and cross-sectional area of no less than 4mm² can be used as photovoltaic

connecting wires. The minimum and maximum outer diameters of the cable are 5 to 7mm. The minimum bending radius of the cables must be 43mm. Any cable damage caused by bending too much or cable management system is not covered under ZNSHINE SOLAR's warranty. When installing modules on the roof, it is recommended to use 4~6mm² special photovoltaic cable. Plug & Play connectors are included at the end of each cable. All other cables used to connect the direct current system shall have similar (or higher) specifications, and should have the suitable insulation ability which can suffer the possible maximum system V_{oc} (as defined in TUV 2PfG1169 or EN50618 (H1Z2Z2-K)) or 62930 IEC 131 1x4mm². ZNSHINE SOLAR requires all cables and electrical connections to comply with the electrical regulations of the countries where the PV system is installed. 现场接线时，只能使用最低耐温90℃、耐阳光（紫外线）、横截面积不低于4mm²的单线光伏专用铜电缆作为光伏连接线。电缆的外径范围5～7mm。电缆的最小弯曲半径应为43mm。因过度弯曲或电缆管理系统造成的损坏不包括在正信光电的保修范围内。在屋面平铺安装组件时，建议使用4～6mm²的光伏专用电缆。每根导线端点都带有即插即用的连接器。用于连接直流系统的所有其他电缆应具有相似（或更高）规格。同时具备适当的绝缘性能以便承受可能的最大系统开路电压（如 TUV 2PfG1169 或者 EN50618（H1Z2Z2-K）或者 62930 IEC 131 1x4mm² 批准）。正信光电要求所有接线和电气连接符合该光伏系统安装地各国电工法规的规定。

受控文本 Controlled Copy

Under normal conditions, a PV module is likely to experience conditions that produce higher current and/or voltage than reported at standard test conditions. Accordingly, the values of I_{sc} and V_{oc} . marked on this PV module should be multiplied by a factor of 1.25 at least when determining module voltage ratings, conductor current ratings, and size of controls (e.g. inverter) connected to the PV output. 在正常情况下，组件可能会遇到产生比标准测试条件下更高的电流或电压的情况。因此当确定组件额定电压、导体额定电流和连接到PV输出的控制装置(如逆变器)的尺寸时，标记在此组件上的I_{sc}和V_{oc}的值最低应乘以1.25的系数。

When selecting a cable, the minimum current-carrying capacity of the cable can be calculated by the following formula. 在选择电缆时，电缆的最小载流容量可以通过下面这个公式来计算。

Minimum current-carrying capacity of the cable $=1.25*I_{sc}*N_p$

电缆最小载流容量$=1.25*I_{sc}*N_p$

I_{sc}: short-circuit current of PV module (unit: A)

I_{sc}：光伏组件的短路电流（单位：A）

N_p: the number of modules in parallel or module strings

N_p：并联的组件数量或者组件串数量

To ensure proper system operation the correct cable connection polarity should be observed when connecting the modules to each other or to a load, such as inverter, a battery etc. If modules were not connected correctly, the bypass diodes could be destroyed. 为了确保系统正常运行，在连接组件或连接负载（如变频器、电池等）时，应观察确保电缆的极性连接正确。如果组件连接不正确，旁路二极管可能会损坏。

Before connecting the module, please make sure using the connector approved by ZNSHINE SOLAR. Otherwise, ZNSHINE SOLAR does not responsible for any potential defects or risks. When conducting electrical connection of the modules, please use diagonal pliers to cut the cable tie. When cutting the tie, be careful not to scratch the cables or the backside of the module. According to the electrical requirements. The positive and negative connectors should be connected in turn, and confirm that you hear a "click" to indicate that the connection is successful. Otherwise, during the operation of the modules, this could lead to electric arc due to poor connections and can burn the connectors. It is not recommended to interconnect different types of connectors. Please pay attention that the unlock method of connectors is different according to local laws and regulations. 连接前请检查，确保使用正信光电认可的连接器相连接，否则正信光电将不承担任何由此造成的缺陷或风险。请使用斜口钳剪开电缆扎带，注意不要划伤电缆和组件背部。按电气要求将组件间正负极连接器依次对插，确认听到"咔"的一声表示连接到位，否则将来组件允许时，会由于虚接产生电弧而烧坏连接器。不同型号的连接器不建议互插连接使用。请注意连接器的打开方法各地法律法规要求不同。

受控文件 Controlled Copy

When modules are in series connection, the string voltage is sum of every individual module in one string. When modules are in parallel connection, the current is sum of the individual module as shown in below figure 5-7. Modules with different electric performance models cannot be connected in one string. During there is no any protection for string due to suitable anti-reverse devices and fuse, do not connect two or more strings with Y or T connector. Do not connect fuse in Combiner Box or string inverter with two or more strings in parallel connection without any anti-reverse devices or function. 当组件连接成一串的时候，最终电压为单块组件之和，当组件是平行并联在一起的时候，最终电流为单块组件之和，如图5-7所示。不同电性能型号的组件不能连接在一串内。禁止在无合适防返装置及熔丝进行组串级保护的情况下使用Y或T型连接器来连接两串或多串组件。禁止将组串接入无防返装置或功能的汇流箱或组串式逆变器中。

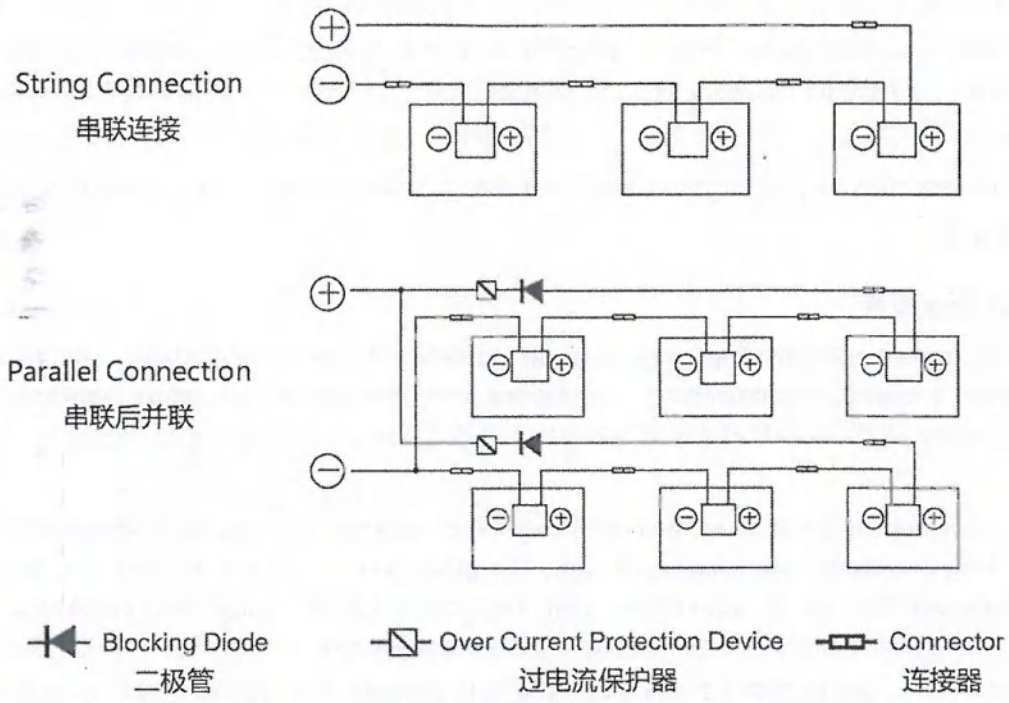

Fig. 5-7 Series Connection and Parallel Connection Circuit Diagram

图5-7 串联、并联线路电气图

Before the commissioning and operation of the power station, please check the electrical connection of modules and strings, making sure all connection polarity is correct and the open circuit voltage meets the requirements of the acceptance criteria. 电站调试允许前，需要对组件和组串进行电器检查，确认组串的极性正确，其开路电压符合验收规范要求。

The number of modules in series and in parallel shall be designed reasonably according to the system configuration. 组件串联、并联数量，需根据系统配置合理设计。

To clear or trim excess cables and ZNSHINE SOLAR recommends that all cables be away from standing water and placed in proper pipework for avoiding the accelerated aging due to UV irradiation. 清理或整理多余的电缆，正信光电建议所有电缆应远离易积水的地方且布设在适当的管道中以避免长期紫外线照射而加速老化。

ZNSHINE SOLAR recommends using lightning protection devices which are complied with local laws and electrical regulations. 正信光电建议使用符合当地法律法规要求和电工规定的防雷保护装置。

All the above instructions must be followed to meet ZNSHINE SOLAR warranty conditions. 须遵守上述所有说明以满足正信光电保修条件。

受控文件 Controlled Copy

3. Bypass secondary 旁路二极管

If PV module part by shadow block, which can lead to reverse voltage related to solar cells, PV modules in other unaffected battery string or other PV modules in the system and current will force through keep out part of the power loss and heat affected cell. When the PV module is connected in parallel with the bypass diode, the current in the system will flow directly through the diode, so as to bypass the blocked part of the PV module and minimize the heating degree and power consumption of the PV module. Bypass diodes are not over-current protective devices. 如果光伏组件某个部分受阴影阻挡，这会导致相关的太阳能电池形成反向电压，太阳能光伏组件中其他未受影响的电池串或系统中其他太阳能光伏组件的电流将会强行通过遮挡部分而产生电量损失并给受影响的电池片加热。当在太阳能光伏组件中并联旁路二极管后，系统中的电流将直接从二极管流过，从而旁路掉太阳能光伏组件中被遮挡的部分，把太阳能光伏组件发热程度和电能损耗降到最低。注意旁路二极管不是过电流保护装置。

Each module has three diodes. Please do not try to open the junction box to replace the diode, or even when the diode problem, please do this work by professionals. 每片光伏组件都在接线盒中装有3个旁路二极管。请不要尝试打开接线盒更换二极管，甚至是当二极管出现问题的时候，这些工作请由专业人士完成。

Please pay attention to guard against inductive lighting, backflow, and wrong connection. 请注意防感应雷、防倒灌以及防接错。

4. Grounding 接地

All module frames and mounting racks must be properly grounded in accordance with the electrical design and construction specifications, procedures, regulations, and other special grounding requirements applicable to the installation sites. 所有组件边框和支架必须按照安装地所适用的电气设计施工规范、规程、法规及其他特殊接地要求正确接地。

Proper grounding can be achieved by connecting the module frame(s) and all metallic structural components together by using a suitable grounding conductor. The grounding conductors or wires may be copper, alloy, or any other materials that are in accordance with the local electrical design and construction specifications, procedures, and regulations. It is recommended to use the copper wire (4-14mm^2 or AWG 6-12) as the grounding wire. The signal" ⏚ " can be found at the grounding hole position. The ground wire must also be connected to ground through a suitable ground electrode. The tight connection of all the joint point should be ensured. 通过使用合适的接地导体将光伏组件边框和所有金属构件可靠连接在一起以实现正确接地。接地导体或接地线可以是铜、合金等符合安装地所适用的电气设计施工规范、规程、法规内规定的电导体的材料。推荐使用4～14mm2 的铜导线（AWG 6-12）作为接地导线。组件的接地孔位置有接地标识" ⏚ "。接地线也必须通过合适的接地电极连接到大地。所有的导电连接点必须牢固连接。

On a grounding hole with a diameter of φ4 mm, use a separate grounding wire and related accessories to connect the aluminum frame of the solar PV module and connect the grounding wire to the ground. The grounding uses the M4*12mm bolts and M4 nuts, star washers and plain washers, this ensures that the modules are firmly grounded. You can find the corresponding product drawing in module datasheet to know the detailed number, size and position of the grounding holes. The torque applied to ground fixation is 4N·m～8N·m. Do not drill any extra ground holes for convenience, this will void the modules warranty. ZNSHINE SOLAR recommends using grounding wires with resistances that are less than 1Ω. 接地孔设计在光伏组件背面的铝合金边框上，直径为4mm，使用单独的接地线和相关配件连接太阳能光伏组件的铝合金边框并将接地线连接到大地，建议使用M4*12mm的接地螺栓并配套有M4的螺母，星型垫圈及平垫圈，这样能确保组件被牢靠接地。您可以在组件产品手册上找到相应的产品图纸，来了解详细的产品接地孔数量，尺寸和位置。接地固定应用扭力矩为4N·m～8N·m。请不要在组件边框上钻孔或者对其进行修改，正信光电有限质保将会无效。正信光电建议接地电阻＜1Ω。

If Grounding of Module through mounting holes by using serrated washers or nuts without any additional requirement of grounding arrangement, then the ground resistance of the whole racking system shall be kept to

be less than 4Ω. For this, new serrated washers shall be used and in any re-use of used washers will not be allowed. 如果安装组件时采用锯齿形法兰垫圈或螺母通过刺穿安装孔部位阳极氧化膜而实现接地，同时并未有其他任何接地措施，那么要求整个支架系统的接地电阻应保持在4Ω以下。为此，应该使用全新的锯齿形法兰垫圈或螺母，任何重复使用的旧垫圈或螺母都是不允许被使用的。

受控文本 Controlled Copy

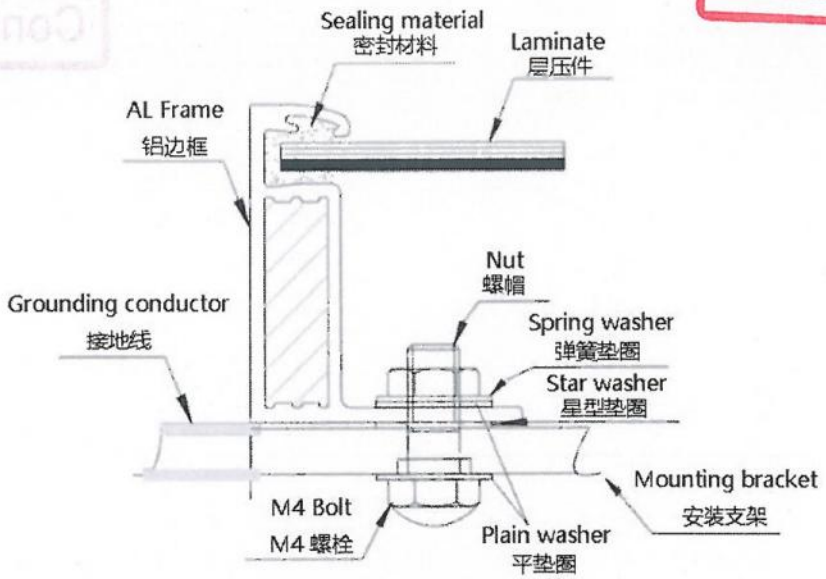

Fig. 5-8 Grounding Diagram

图5-8 接地示意图

When grounding, each module can be grounded directly or in series or in parallel. If you choose the latter two options, it is recommended that the maximum number of modules connected in parallel should not exceed four, and in series should not exceed eight. 接地时，可以每块组件直接接地，也可以在组件串联或者并联后接地。在采取后者方式接地时，建议并联的最大数量不应超过四块组件，串联的最大数量不超过八块组件。

In addition to use the grounding hole, you can also choose the following grounding ways: 除了使用接地孔来进行接地外，您也可以选用以下方式来进行接地：

（1）Grounding by unused mounting holes 使用未被使用的安装孔接地

（2）Other professional grounding devices 其他专用接地装置

（3）If has no ground holes in PV module's metal frames, needs to be grounded through PV double-spike grounding gaskets. 如果光伏组件的金属边框上没有接地孔，则需要使用光伏双刺接地垫片接地。

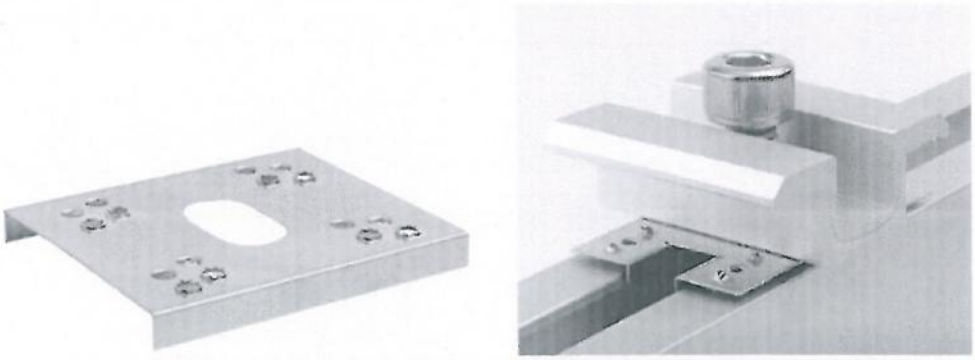

Fig. 5-10 Double spine ground gasket and installation diagram

图5-10 双刺接地垫片及安装示意图

The electrical contact points of all the above grounding methods should penetrate the anodized film of the aluminum frame. PV modules can be grounded by other grounding devices, which must be reliable and certified.

The manufacturer's requirements should be followed. 不管采用哪一种接地方式，所有光伏组件铝合金边框的接地电接触点都需要穿透铝边框的阳极氧化涂层。在使用专用接地装置等其他第三方的接地装置接地时，需要确保这些接地装置是可靠的，并且通过专业认证的产品，在安装时需要遵守接地装置生产商的使用规定。

受控文本
Controlled Copy

6. MODULE MAINTENANCE 组件维护

受控文本 Controlled Copy

In order to ensure the long-term using of the installed PV system and maximize the Power output performance of the modules, the installed PV modules need to be inspected and maintained regularly, which is the responsibility of the users. The inspection and maintenance of modules in the PV array shall be carried out by personnel who have received professional PV system maintenance training and obtained relevant qualifications and authorization. 为了保证所安装的光伏系统能够长期使用，并且最大化组件的功率输出表现，需要定期对所安装的光伏组件进行检查和维护，这是用户必须履行的责任。光伏方阵中组件的检查和维护需要受过专业光伏系统维护培训并获得相关资质和授权的人员来进行。

6.1. PANEL VISUAL INSPECTION AND REPLACEMENT 组件外观检查和替换

The modules in a PV array should be regularly checked for damage. Factors such as glass breakage, cable breakage, junction box damage and the terminals cannot be connected well may lead to function and safety problems. In the case of a damaged module, replace it with the same type of module. Do not touch live parts of cables and connectors. Use appropriate safety equipment (insulated tools, insulating gloves, etc.) when handling modules. Refer to the appropriate Product Installation Manual for installation and disassembly of module. 应定期检查光伏方阵中组件是否有坏，例如玻璃破裂、线缆破损、接线盒损坏、接线端子无法良好连接等因素导致组件发生功能性和安全性故障，须更换相同类型组件。不许触碰电缆和连接器的带电部位。搬运组件时应使用适当的安全防护装置（绝缘工具、绝缘手套等）。组件的安装和拆卸请参阅产品安装说明书。

Check the electrical, grounding and mechanical connections once at least during every 6 months to ensure they are clean and safe, free from damage or rust. Check that all string fuses in each non/earthed pole are operating. Check that the mounting parts are tight. Check all cables and make sure that the connectors are securely. PV modules frames and bracket should be well mechanically connected. 建议每6个月至少检查一次电气、接地和机械连接件，确保其清洁安全，无损坏或生锈；检查每个非接地极中的所有阵列保险丝是否正常工作；检查安装部件是否已拧紧；检查所有电缆并确保接头牢固拧紧。使用金属边框的光伏组件，边框和支架应结合良好。

Check whether there is any foreign body on the surface of the PV modules and whether there is any shielding. The vegetation should be cut regularly to avoid shading and thus affecting the module's performance. 检查光伏组件表面是否有异物，是否有遮挡。应定期削减植被，避免植被遮挡光伏组件，影响组件性能。

Take care to prevent foreign objects such as lawn mowers and rolled up stones from hitting the surface of modules that would cause the damage of glass or modules. 注意防止割草机及卷起的石子等异物撞击组件表面，导致玻璃或组件破损。

When repairing PV modules, cover the surface of PV modules with opaque material to prevent electric shock. Exposure of PV modules to sunlight will generate high voltages, this is dangerous. Please pay attention to safety when maintenance and it must be done by professionals. 修理太阳能光伏组件时请用不透明的材料覆盖在太阳能光伏组件表面以防止产生电击。太阳能光伏组件曝露在阳光下会产生高电压，维修时请注意安全，维修必须有专业人员进行。

Wear cut resistant gloves and other personal protective equipment required for the particular installation. Isolate the impacted array string to prevent current flow before attempting to remove the module. Disconnect the connectors of the affected module using the related disconnect tool provided by suppliers. Replace the damaged module with a new functional module of the same type. 进行特殊安装时需要穿戴防切割手套和其他防护装备。在尝试移除组件之前，一定要将受影响的阵列隔离以防止电流产生。用供应商提供的相关断开工具去断开受影响组件的连接器。使用相同类型的新组件更换损坏的组件。

In a system using a battery, blocking diodes are typically placed between the battery and the PV module output to prevent battery discharge at night. 在使用电池的系统中，阻塞二极管通常放置在电池和光伏组件输出装

置之间以防止夜间电池放电。

When the irradiance is no less than 200W/m², if the terminal voltage is more than 5% different than the rated value, it illustrates the connection of the modules is not good. 在辐照度不低于200W/m²的情况下，如果终端的电压与额定值相差5%以上，说明组件连接不好。

受控文本 Controlled Copy

Comply with maintenance instructions for all modules used in the PV system, such as brackets, charging rectifiers, inverters, batteries, lightning protection systems, etc. 必须遵守光伏系统使用的所有部件，如支架、充电整流器、逆变器、蓄电池、防雷系统等的维护说明。

Warning: The warning signs on the PV modules must not be lost. Any electrical maintenance must shut down the PV system firstly. Improper system maintenance may cause fatal dangers such as electric shock and burning. Observe the safety precautions listed earlier in this Manual.

警告：光伏组件上的带电警告标识不得丢失。任何电气的维护都必须首先关闭光伏系统，不合适的系统维护可能导致电击和燃烧等致命的危险。请注意本说明书前面列出的安全注意事项。

6.2. CONNECTOR AND CABLE INSPECTION 连接器和线缆检查

It's recommended to implement the following preventive maintenance every 6 months: 推荐每六个月进行一次以下的预防性维护：

（1）Check the sealing gels of the junction box for any damage. 检查接线盒密封胶，确保没有裂纹或缝隙；

（2）Examine the PV module(s) for signs of deterioration. Check all wiring for possible rodent damage, weathering and that all connections are tight and corrosion free. Check electrical leakage to ground. 检查光伏组件的老化迹象，包括可能的啮齿动物破坏、气候老化，以及所有连接器是否连接紧密、有无腐蚀现象。检查组件是否接地良好。

（3）Inspect all cables to verify that connections are tight, the cables are protected from direct sunlight and sited away from areas of water collection. 检查所有电缆以验证其连接是否牢固；避免电缆受阳光直射且使其远离积水区域。

（4）Check the torque of terminal bolts and the general condition of wiring. Also, check that mounting hardware is properly torqued. Loose connections will result in damage to the array. 检查端子螺栓的扭矩和接线的各方面情况。此外，检查安装的硬件是否紧固到位。连接松动会导致阵列损坏。

6.3. CLEANING 清洗

This manual covers the requirements for the cleaning procedures of ZNSHINE SOLAR PV modules. Professional installers should read these guidelines carefully and strictly follow these instructions. Failure to follow these instructions may result in death, injury, or property damage. Damages induced by inappropriate cleaning procedures will void ZNSHINE SOLAR warranty. 本说明书包含了正信光电光伏组件清洗的要求。系统用户及专业安装人员应仔细阅读并且严格遵循。如果没有按照这些说明执行，可能会导致死亡、伤害或财产损失。由于不恰当的清洗方式导致的损害，正信光电有限质保将会无效。

The power output of the module is related to the received sunlight. Dust accumulation on the glass surface of the module will reduce its power output and may even cause hot spots. So the surface of PV modules should be kept clean. Maintenance work should be performed at least once six months or frequently. The dirt such as bird droppings, leaves, dust is usually need to be cleaned. 组件的功率输出和接受到的光照有关，灰尘堆积在组件的玻璃表面会降低组件功率输出，甚至可能会导致热斑。所以光伏组件表面应保持清洁，清洗工作应至少半年一次或根据污染程度来进行更频繁的清洗。通常需要清洁的脏污如鸟粪、树叶、灰尘等。

Warning: It should be carried out by trained personnel. Workers should wear PPE, such as goggles, electric

insulation gloves and safety shoes. The gloves should withstand DC voltages of no less than 2000V.

警告：组件的清洗工作应由受过训练的人员进行，工作人员应戴橡胶手套和工作靴，应能承受不低于2000V的直流工作电压。

受控文本 Controlled Copy

Improper cleaning activities create risk of damaging the modules and array components, as well as increasing the potential electric shock hazard. Cracked or broken modules represent an electric shock hazard due to leakage currents, and the risk of shock is increased when modules are wet. Before cleaning, thoroughly inspect modules for cracks, damage, and loose connections. 不当的清洗工作会造成组件以及一系列零部件的损坏风险，同时也会增加触电危险。破裂或者损坏的组件会由于漏电流而出现触电危险，而且组件潮湿会加剧这种触电风险。清洗之前需要完整地检查组件是否有破裂，损坏，以及接头松动。

During the daylight, the voltage and current present in the array are sufficient to cause a fatal electric shock. Clean PV modules when the irradiance is below 200W/m². Before cleaning, please make sure that the circuit is disconnected, otherwise contact with the exposed part of live parts will cause injury. Wear suitable protective clothing (clothes, insulating gloves, etc.) when cleaning the modules. Do not immerse the module, partially or totally, in water or any other cleaning solutions. Do not use such as lubricants and organic solvents to clean the connectors. 在白天，阵列中存在的电压和电流足以引发致命的触电事故，应在辐照度低于200W/m²的情况下清洁光伏组件。清洗之前，请确保电路是断开的，否则接触带电部件裸露的部分会导致伤害。清洗时，应穿戴合适的防护服(衣服，绝缘手套等)。禁止将组件部分或完整地浸入水或任何一种洗涤溶液。禁止使用润滑剂、有机溶剂等清洁连接器。

Use a dry or wet, soft and clean cleaning cloth, sponge, or soft bristled brush to gently wipe the modules. Please make sure that the cleaning tools do not wear out glass, EPDM, silicon, aluminum alloys or steel. Dot not use corrosive solvents and do not wipe the PV modules with hard objects. The module must not be subjected to additional external force. If there is greasy dirt and other substances on the surface of the PV module which are difficult to clean, conventional household glass cleaning agents can be used. Do not use the alkaline and strong acid solvents, including hydrofluoric acid, alkali, acetone. If necessary, use iso-Propyl alcohol (IPA) or other solution according to the safety instructions to clean and ensure that no solution flows into the gap between the edge of the module and the module frame. 应使用干燥或湿润的柔软洁净清洁布、海绵或者软毛的刷子温和地擦拭光伏组件，并确保使用的清洁工具对玻璃、EPDM、硅、铝合金或钢不产生磨损。严禁使用腐蚀性溶剂或用硬物擦拭组件。组件严禁承受额外的外力。光伏组件表面有油污等难清洁物质，可使用常规家用玻璃清洗剂；注意不能使用碱性及强酸性溶剂，包括氢氟酸、碱、丙酮等。如有必要，可按照安全指示使用异丙醇（IPA）或其他合适溶剂清洗，并确保溶剂没有流入组件边缘和组件框架之间的间隙。

When cleaning the modules, use a soft cloth together with a mild detergent and clean water. Take care to avoid severe thermal shocks which might damage the module by cleaning modules with water which make sure the temperature difference between the water and the module is in the range of -5℃～10℃. For example, do not use cold water to clean the module when the temperature of it is high during the day, otherwise there will be the risk of module damage.清洁组件时，应使用软布和温和的清洁剂以及清水。清洁组件时应保证水温和组件温度的差异在-5℃～10℃之间，以注意避免出现严重的可能损坏组件的热冲击。比如不在一天中光伏组件温度较高的时候使用冷水清洗，以防损坏光伏组件。

It is forbidden to clean PV modules under the weather conditions of wind more than 4 grades (in Beaufort scale), heavy rain or heavy snow. 严禁在风力大于4 级（蒲福风级）、大雨或大雪的气象条件下清洗光伏组件。

When cleaning PV modules, do not step on the modules; Do not spray water on the backside of the module or the cables; keep the connectors clean and dry; prevent fire and electrical shock from occurring; Do not use steam cleaner. 光伏组件清洁工作中，严禁踩踏组件、严禁流水溅射至组件背面和电缆，严禁清洁组件背面，要保证连接头的清洁和干燥，防止电击和火灾危险；严禁使用蒸汽清洁器。

The back surface of the module normally does not need to be cleaned but, in the event this is deemed

necessary, avoid the use of any sharp projects that might damage the penetrating the substrate material. When cleaning the back surface of the module, take care to avoid penetrating the substrate material. The other cleaning requirements are the same as the front-side. 组件的后表面通常不需要清洁；但在认为确实有必要对其进行清洗时，应避免使用可能引起损坏或穿透基底材料的一切尖锐物体。清洁组件的背面时，注意避免清洗液渗到材料底层。其他清洁要求和正面清洗要求相同。

受控文本 Controlled Copy

Do not scrape or grind stains off surfaces while PV modules are dry, as this can cause minor scratches on the surface. 组件干燥的情况下不要在表面将污渍刮掉或者磨掉，因为这样会在表面引起细小的刮伤。

CLEANING METHODS 清洗方法

Method A: Compressed water 方法A：高压水流清洗

Requirement for water quality: 水质要求：

（1）pH: 6～8； pH 值:6～8

（2）Chloride or salt content: 0 ～3000 mg/L 氯化物或盐分含量：0～3000 mg/L；

（3）Turbidity: 0～30 NTU 浑浊度：0～30 NTU；

（4）Conductivity: 1500～3000 μs/cm 电导率：1500～3000 μs/cm；

（5）Total dissolved solids (TDS): ≤1000 mg/L 总溶解固体（TDS）：≤1000 mg/L；

（6）Water hardness (calcium and magnesium ions): 0～40 mg/L 水硬度（钙和镁离子）0 ～40mg/L；

（7）Recommend to use soft water to wash. 推荐使用软水清洗。

（8）Water pressure on the glass surface of the module must not exceed 700 KPa. 组件玻璃表面的水压不得超过700KPa。

Method B: Compressed Air 方法B：压缩空气清洗

ZNSHINE SOLAR recommends using this method to clean the soft dirt (like dust) on modules. This technique can be applied as long as the method is efficient enough to clean the modules considering the on-site conditions. 推荐清洗组件上软质污渍（像灰尘）时，使用气压清洗方式。只要现场清洗效果足够好，此技术就可被应用。

Method C: Wet cleaning 方法C：湿式清洗

If excessive soiling is present on the module surface, a non-conductive brush, sponge, or other mild agitating method may be used with caution. 如果组件表面存在过多的污渍，那可以小心地使用绝缘刷，海绵或别的软质的清洗工具。

Please make sure that any cleaning tools are constructed with non-conductive materials to minimize risk of electric shock and that they are not abrasive to the glass or the aluminum frame. 确保所有清洁工具由绝缘材料构成，使触电的风险降到最低，且这些工具对玻璃或铝合金边框不会产生划痕。

If grease is present, an environmentally friendly cleaning agent may be used with caution. Do not use the alkaline and strong acid solvents. If necessary, use iso-Propyl alcohol (IPA) or other solution according to the safety instructions to clean and ensure that no solution flows into the gap between the edge of the module and the module frame.如果有油渍存在，那可以谨慎地使用一种环境友好型清洁剂。注意不能使用碱性及强酸性溶剂。如有必要，可按照安全指示使用异丙醇（IPA）或其他合适溶剂清洗，并确保溶剂没有流入组件边缘和组件框架之间的间隙。

Method D: Cleaning robot 方法D：清洗机器人清洗

If a cleaning robot is used for cleaning, the brush material is required to be soft plastic material with famous brand such as Dupont and the cleaning method is required to be wet cleaning, and the glass surface and aluminum alloy frame of the module will not be scratched during the cleaning process and after cleaning. The

weight of the cleaning robot should not to be too large. If the cleaning robot is improperly used, and the resulting module damage and power attenuation are not covered by ZNSHINE SOLAR's warranty. 如果采用清洗机器人进行清洗，要求毛刷材质为知名品牌软性塑料(如杜邦)，要求清洗的方式应为"湿式清洗"清洗过程及清洗后不会对组件玻璃面和铝合金边框造成划伤，清洗机器人的重量不宜过大，对采用清洗机器人清洗不当造成的组件损坏，功率衰减，不在正信光电质保范围内。

受控文本 Controlled Copy

ZNSHINE recommends that the walking speed of the cleaning robot does not exceed 12m/min. 正信光电建议清洗机器人行走速度不超过12m/min。

6.3.1. MODULE INSPECTION AFTER CLEANING 清洗后组件检查

(1) Ensure that the module under visual inspection is clean, bright and free of stains;
目视组件整体外观是否清洁、明亮、无污渍；

(2) Spot check to verify whether there is soot deposit on the module surface;
抽样检查组件表面是否有积灰存在；

(3) Check to whether there are visible scratches on the surface of the module or not;
检查组件表面有无明显的刮伤痕迹；

(4) Check whether there is no man-made cracks on the module surface or not;
组件表面有无人为造成的破裂现象；

(5) Check whether the module support structure is leaning or bent or not;
清洗后组件支架有无倾斜和弯曲现象；

(6) Check whether the connectors of the module are detached or not;
清洗后组件接线端子是否有松开或脱落现象；

(7) After cleaning, fill out the PV module cleaning record.
需要完成清洗后文字记录。

6.3.2. TROUBLESHOOTING 故障排查

If the PV system does not work properly, please inform your installer immediately. It is recommended to perform a preventive inspection at least every six months, please don't change any modules of the modules. If electrical or mechanical properties are required for inspection or maintenance, qualified professionals should be advised to avoid any electric shock or loss of life. 如果安装后，光伏系统无法正常工作，请立即通知安装商。建议每6个月至少执行一次预防性检查，不要擅自更换组件的元部件，如果需要进行电性能或机械性能的检查和维护，需要让具有资质的，并且受过专业培训的专业人员进行操作，以免发生触电或人员伤亡。

Appendix A： CORROSION PREVENTION INSTALLATION GUIDE 防腐蚀安装指南

受控文本 Controlled Copy

According to the conditions specified in the installation manual of ZNSHINE Technology Co., Ltd. and the general warranty statement, the installation of ZNSHINE modules in the coastal area must be carried out in strict accordance with this manual.根据正信光电科技股份有限公司安装手册规定的条件以及一般保修声明，正信光电组件沿海区域的安装必须严格按照本安装指南进行。

The purpose of this appendix is to approve the installation of modules within the coastal area. The Appendix sets out the general requirements for ensuring the correct and reliable installation of modules in coastal areas, including but not limited to the principles of corrosion protection for the modules and associated installation systems. The appendix summarizes the key technical requirements specified by well-known international standards and explains how these requirements apply to photovoltaic systems.本附录旨在批准客户在沿海区域范围内安装光伏组件。附录规定了确保正信光电光伏组件在沿海地区正确可靠地安装的一般要求，包括但不限于组件和相关安装系统的防腐原则。附录总结了知名国际标准规定的关键技术要求以及这些要求如何应用于光伏系统。

Please read this appendix carefully and strictly follow the relevant instructions before installing ZNSHINE PV modules in coastal areas. Failure to comply with these guidelines and other general anti-corrosion principles may result in corrosion damage to PV modules and mounting systems and invalidate the product and performance limited warranty. For further inquiries, please contact our technical services department or local agent for more information.在沿海地区安装正信光电光伏组件之前，请仔细阅读本附录并严格遵守相关指导。不遵守这些指导以及其他一般防腐原则可能导致光伏组件和支架系统受到腐蚀损坏，并导致正信光电的产品和性能有限质保无效。如需进一步咨询，请联系我们的技术服务部门或当地代理以获取更多信息。

The pile-mounted offshore module product requires bracket installation, not floating modules. The modules are installed above the sea level with a certain pile and bracket height, and the installed modules should not come into contact with the water surface after high tide.桩基式海上光伏组件产品要求必须为支架式安装，非海上漂浮组件，通过一定的桩基及支架高度把组件安装在海平面以上，要求安装后的组件在涨潮后的最高水平面仍不能接触组件。

Local conditions strongly influence the salt deposition rate, which is particularly, but not exclusively, dependent on specific regions and local wind patterns. ZNSHINE Solar reserve the right to modify the above definition in specific cases. Please contact your local representative to confirm which category your PV system falls under.当地状况对盐雾沉降速率有显著影响，后者很大程度上（但并非绝对）取决于特定区域以及本地风模式。正信光电保留在特定案例中修改上述定义的权利。请联系本地代理商以确定您的光伏系统所属类型。

In this manual, the term "coastline" means the boundary where the sea meets the land at high tide.本手册中提及的"海岸线"指涨潮时海水与陆地的交界线。

The "distance to the coastline" mentioned in this manual refers to the shortest distance between the PV module and the coastline.本手册中提及的"与海岸线的距离"指的是光伏组件和组串与海岸线之间的最短距离。

Please contact our technical support department or your local agent for more information on the installation of anti-corrosion modules.请联系正信光电技术支持部门或您当地代理商以获取更多关于防腐蚀组件的安装信息。

Corrosion resistant components can meet most natural coastal environments, but they are not absolute.防腐蚀组件可以满足大多数海边自然环境，但不具备绝对性。

The reliability of PV modules is closely related to their distance from the coastline. Coastal land areas are divided according to their distance from the coastline, and ZNSHINE usually divides coastal PV installation types into 4 different groups, as shown in the following table:光伏组件可靠性与其距离海岸线的距离密切相关。沿海土地区域按照其与海岸线的距离进行划分。正信光电通常将海岸光伏安装类型分成 4 个不同的组，如下表所示：

Distance from the coastline 与海岸线的距离 (X)	Require 要求
X ≤ 50 m	Must contact ZHSHINE and install according to the instructions in Appendix A after confirmation.必须联系正信光电，在确认后按附录 A 的指导安装.
50< X ≤ 100 m	Anti-corrosion modules of ZNSHINE must be used. Installation must follow the instructions in Appendix A.必须使用正信光电的防腐蚀组件,

	安装必须遵循附录 A 的指导。
100m < X ≤ 1000 m	Anti-corrosion components of ZNSHINE are recommended. You are advised to follow the instructions in Appendix A 推荐使用正信光电的防腐蚀组件。建议安装遵循附录 A 的指导。
>1000 m	Follow the instructions in Chapter 5 of this manual.请遵循本手册第 5 章的指导。

受控文件 Controlled Copy

A.1 BASIC CORROSION PREVENTION METHODS 基本防腐蚀方法

(1) Do not scratch or break the corrosion-resistant coating on the modules or mounting systems during installation.. 安装过程中，组件表面不得接触尖锐物体，玻璃、边框、连接器、接线盒等表面不能有划伤。

(2) Do not change the structure of the module, for example, drilling holes on the frame of a module.请勿改变组件结构，例如在组件边框上钻孔。

(3) Process and specifications for all components must comply with relevant international anti-corrosion standards . 安装使用的零部件的工艺规范必须符合相关国际防腐标准。

(4) Maintain the anti-corrosion coating regularly. 定期维护防腐涂层。

(5) Modules (glass, junction boxes,and connectors) shall not be exposed to long-term environments containing sulfur, strong acids, strong alkalis, etc., which have a risk of corrosion to the product, and shall not be exposed to organic solvents that can destroy the anti-reflection coating of the front glass or the polymer of the junction box and back plant. 组件（玻璃、接线盒、连接器等）禁止长期暴露于含硫、强酸、强碱等对产品有腐蚀风险的环境中，且禁止接触可破坏正面玻璃减反射涂层或接线盒和背板聚合物的有机溶剂。

(6) Before installation, the connector is protected by a dust-proof plug. After removing the dust-proof plug, the connector should be connected immediately to prevent water vapor mud from entering the erosion of the Pin PIN, etc. If it is necessary to further improve the corrosion resistance, the cold-shrink pipe protection connector is added after installation. The connector and cold-shrink pipe are prohibited from under water use. 安装前连接器有防尘塞保护，除去防尘塞后，应立即连接连接器，防止水汽泥浆进入侵蚀Pin针等如需进一步增加防腐蚀性能则安装后加冷缩管保护连接器，连接器及冷缩管禁止在水下使用。

(7) When installing corrosion protection Modules, follow all requirements listed in the installation manual of ZNSHINE. 安装防腐蚀组件时应遵循正信光电安装手册中列出的所有要求。

A.2 SPECIAL CORROSION PROTECTION METHOD DURING INSTALLATION安装过程特殊防腐蚀方法

(1) Use mounting components that contain the same metals or metals with a similar electrochemical potential. The metal’s coating also should be taken into account. There may be a big difference between the electrochemical potentials of two different coating materials. The potential difference between the support, fastening or grounding structure and the metal frame should be less than 0.6 V (refer to UL 2703).使用同种金属或电化学势能相似的金属安装零部件。金属镀层也应纳入考量，不同金属镀层材料之间的电化学势能可能相差很大。支撑结构/紧固结构/接地结构与组件边框金属之间电势差要求＜0.6 V（参考 UL 2703）。

(2) If the potential difference exceeds 0.6 V, please add insulation layers (e.g. insulation gaskets or insulation coatings) to isolate the two metals. Insulation gaskets can be made of mica laminates, silicon resin or fluorinebased materials. Special insulation coatings like Dacro or OTC can also be applied. 如果支撑结构/紧固结构/接地结构金属与组件边框金属之间电势差＞0.6 V，请增加绝缘层（如绝缘垫圈、绝缘涂层）以隔绝两种金属。绝缘垫圈推荐使用云母层压片，或其他硅树脂或氟基绝缘材料。或者与组件边框金属接触部件结构采用特殊绝缘涂层（如达克罗、OTC 涂层等）处理。

(3) If the anti-corrosion coating is worn due to external force, it needs to be repaired in time防腐镀层因外力被磨损的，需要及时修复。

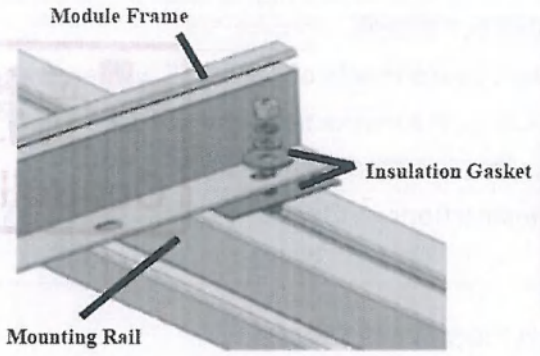

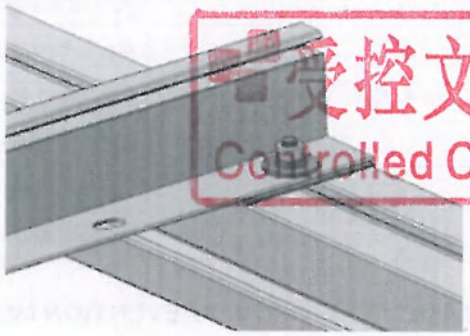

受控文本
Controlled Copy

A.3 GROUNDING CORROSION PROTECTION接地防腐蚀

ZNSHINE recommends two special anti-corrosion methods to protect the grounding device of the system. Please refer to the instructions in the table below:正信光电推荐两种保护系统接地装置的特殊防腐蚀方法。请遵循下表指导：

Items项目	Method方法A	Method方法B
Coating Structure 涂层结构	Fluorocarbon varnish (single layer) 氟碳清漆（单层）	Layer 1 (metal side)第一层(金属侧)： epoxy zinc-rich primer 环氧富锌底漆 Layer 2 (middle layer) 第二层(中间层): fluorocarbon finish paint 氟碳面漆 Layer 3 (air side)第三层(空气侧)： fluorocarbon varnish 氟碳清漆
Coating Thickness 涂层厚度	40 μm	Layer 1 (metal side)第一层(金属侧)：40 μm Layer 2 (middle layer)第二层(中间层)：40 μm Layer 3 (air side)第三层(空气侧)：40 μm
Coating Interval 涂层间隔	/	Follow the supplier's general requirements when painting the three coats. Apply the middle layer 24 hours after painting layer 1. Paint the air side layer 6 hours later after painting the middle layer.涂三层涂层时遵循供应商的一般要求。第一层涂层结束 24 h 后开始涂中间层，又 6 h 后涂空气侧涂层。
General Requirements 一般要求	Clean grounding parts to ensure they are dry and clean. The coating must completely cover the grounding parts and the joints of the module frame or mounting system. See the image below for more details. The coating should be used in dry air (at least 24 h), ensuring the following conditions: relative humidity RH≤75%, ambient temperature T>5°C.清洗接地零部件，确保其保持干燥、清洁。涂层必须完全覆盖接地零部件以及组件边框或安装系统的连接处。请参照下图以获取更多细节。涂层应在干燥的空气中使用（至少 24 h），保证如下条件：相对湿度 RH≤75%，环境温度 T>5°C。	
Maintenance Intervals 维护周期	**3 months 3 个月**	**5 years 5 年**

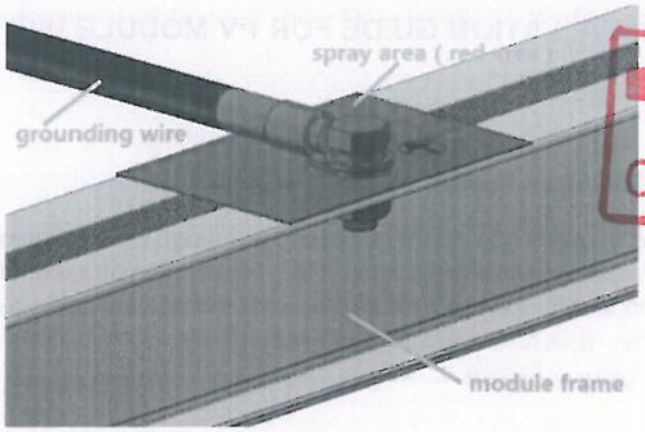

受控文本
Controlled Copy

A.4 PRECAUTIONS AND GENERAL SAFETY INFORMATION注意事项和一般安全信息

(1) Before installing any modules, contact the appropriateauthorities to obtain any relevant approvals and learn of any site site, installation, and inspection requirements.安装组件之前，请联系适当的机构或实体以获取相关核准信息，了解对于站点、安装和检查的要求。

(2) When applying coating materials, workers must follow applicable health and safety legislation and apply all respective preventive and proactive measures described within. 使用镀层材料时，工作人员必须遵循适用的健康和安全法规，采用所有预防和主动措施。

(3) ZNSHINE Solar shall not be held responsible for damages of any kind, including but not limited to, bodily harm, injury and damage to property as a result of handling modules, installing systems, or compliance or non-compliance with the instructions set forth in this manual.针对组件处置过程中（包括但不限于拆/包装、装卸货、搬运、运输、储存、安装、连接、拆卸、运维等）任何操作造成的任何产品瑕疵或毁坏、人身损害和财产损失，正信光电不承担任何责任，因法律另有规定或正信光电故意或重大过失导致的除外。

Appendix B： INSTALLATION GUIDE FOR PV MODULE WITH COMPOSITE FRAME 复合材料边框组件安装安装指南

受控文本 Controlled Copy

B.1. Mounting with Clamps压块安装

It is recommended to use curved clamp or clamp with hook for installation.And clamp with length of ≥60mm and thickness of ≥4mm,\ material (aluminum alloy 6005-T5) installation method is the same as that of aluminum frame, and can be adapted to different manufacturers' press block installation diagram, see Figure 1 建议使用弧形压块或者带钩的压块进行安装，压块长度≥60mm,厚度≥4mm,材质（铝合金 6005-T5）安装方式与铝边框无差异，可适配不同厂家的压块，压块安装示意图见图一

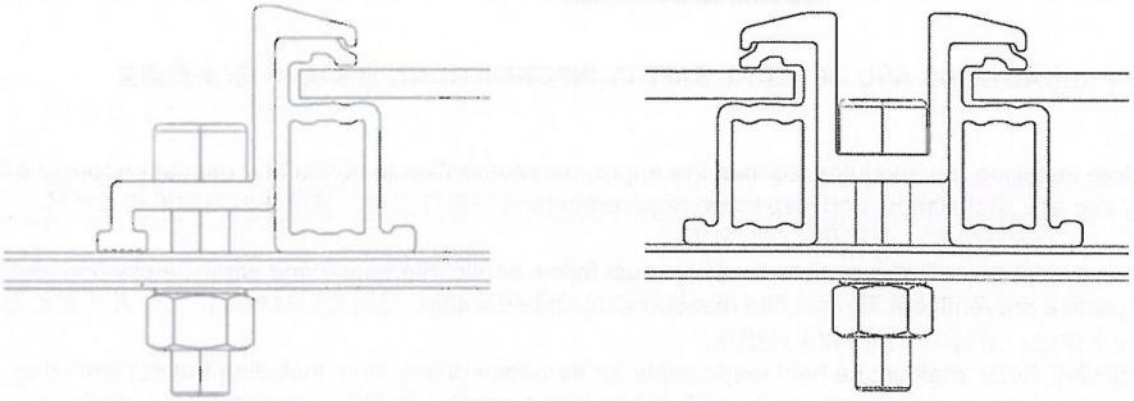

Figure 1. Installation diagram of special compression block of composite frame
图一 复合材料边框特殊压块安装示意图

B.2Mounting with bolts 螺栓安装

B2.1Bolt gasket installation 螺栓垫片安装

The solution replaces the conventional bolt-mounted gaskets with L-shaped gaskets (material: aluminum 6063-T5, AA10). The installation method after replacing the gasket is the same as that of the aluminum frame该方案将常规的螺栓安装的垫片更换为 L 型垫片（材质：铝合金 6063—T5，AA10）。更换垫片以后的安装方式与铝边框无差异；

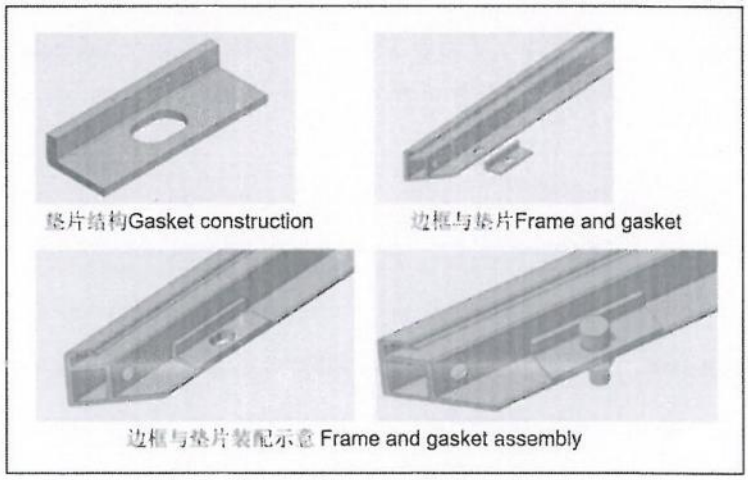

Figure 2. Gasket installation diagram
图二 垫片安装示意图

B2.2 C-type structural component installation C型结构件安装

In some areas with more stringent load requirements, it is recommended to install C-type structural parts. The specific installation steps are as follows:在一些载荷要求更为严苛的地区建议示意 C 型结构件安装，具体安装步骤如下：

受控文本
Controlled Copy

1）Insert the C-type structural part into the long side of the composite frame, and align the C-type structural part mounting hole with the frame mounting hole;将 C 型结构件嵌入复合材料边框长边，C 型结构件安装孔与边框安装孔对齐；

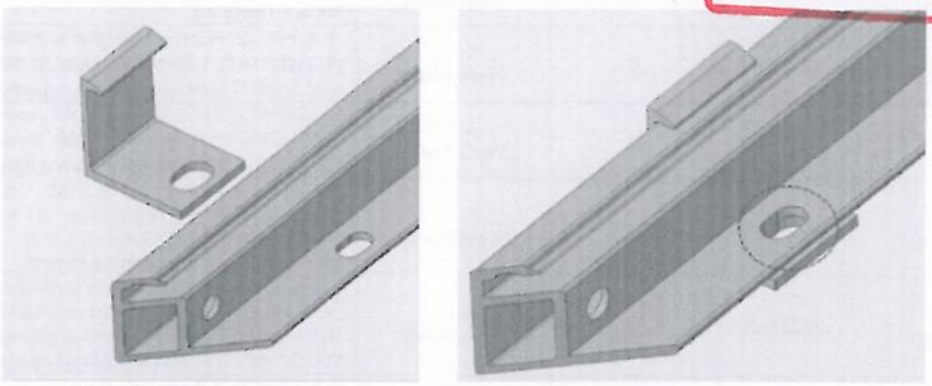

Figure 3 C-type structural parts and border assembly drawing
图三 C 型结构件与边框装配图

2）Install the combined C-type structural parts and photovoltaic modules on the support, and the installation method after the combination is the same as that of the conventional frame bolts.将组合好的 C 型结构件与光伏组件安装到支架上，组合后的安装方式同常规边框螺栓安装一致。

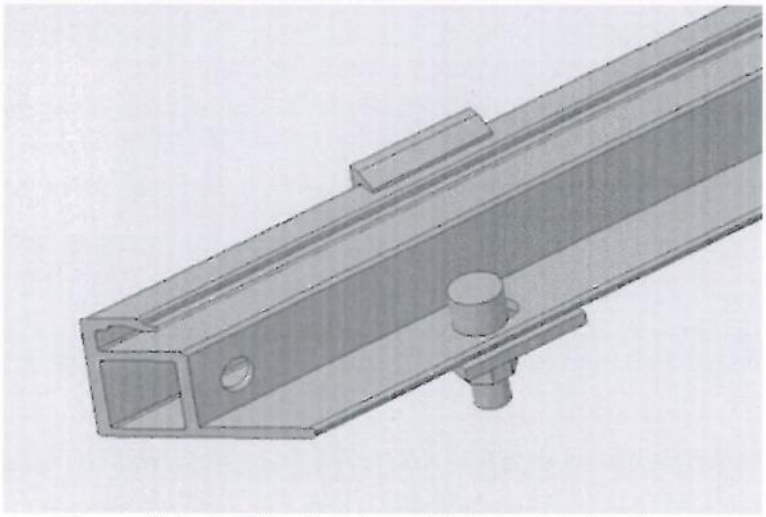

Figure 4 Assembly drawing of C-type structural parts
图四 C型结构件装配图

受控文本
Controlled Copy

7. Modify record

Revise 修订	Date 日期	Version No. 版本号	Reviser 修订者	Remarks (modifications, chapters, etc.) 备注（修改内容、章节等）
修订 revision	2020.2.29	A	王伟（小） Wells Wang	原文件编号为QES/ZX-TD-III123A，内容未作修改 The original document number is QES/ZX-TD-III123A, the content has not been modified.
修订 revision	2020.8.18	B	王伟（小） Wells Wang	全文中英双语 Full text in English and Chinese 载荷适用166组件 Mechanical load for 166 PV modules 增加清洗要求 Increase cleaning requirements
修订 revision	2020.10.13	C	王伟（小） Wells Wang	增加操作时安全注意事项 Add safety considerations during operation 修改线缆耐温范围 Modify the cable temperature tolerance range 修改组件清洗频率 Modified cleaning frequency
修订 revision	2021.12.13	D	王伟（小） Wells Wang	以长度来区分光伏组件，并覆盖182、210mm系列。PV modules are distinguished by length and cover 182 and 210mm series. 清洗方式中加入有关清洗机器人的描述。A description of the cleaning robot is added to the cleaning method.
修订 revision	2022.5.27	E	王伟（小） Wells Wang	完善安装注意事项 Improve the installation precautions. 修改垫圈外径 Modify the outer diameter of the gasket. 修改水质要求 Modify the water quality requirements for cleaning. 增加法兰螺母接地 Add the grounding of flange nut.
修订 revision	2024.4.10	F	杨江霄 Mack Yang	完善安装注意事项 Improve the installation precautions. 增加沿海区域防腐蚀安装指南In:Corrosion Prevention Installation Guide for coastal areas
修订 revision	2024.9.30	G	杨江霄 Mack Yang	完善安装注意事项 Improve the installation precautions. 增加聚氨酯边框组件安装指南Add the installation guide for pv module with composite frame